Smart RF Wireless Data Microtransmitter

AT86RF401

Features

- RF Frequency Range of 264–456 MHz
- 6 dBm RF Output into Matched Antenna
- RF Output Power Adjustable over 36 dB with 1 dB Resolution
- Phase-locked Loop (PLL) Based Frequency Synthesizer
- Supports OOK Modulation
- Data Bandwidth of Up to 10 Kbps Manchester
- 2-volt Operation
- 8-bit AVR® RISC Microcontroller Core
- Minimal External Components
- Space-saving 20-lead TSSOP
- 2 KB (1K x 16) of Flash Program Memory
- 128 Bytes of EEPROM
- 128 Bytes of SRAM
- In-system Programmable Data and Program Memory
- Six I/Os (Serial I/F, LED Drive Outputs, Button Input Interrupts)
- Low Battery Detect and Brown-out Protection
- Software Fine-tuning of VCO Tank Circuit

Applications

- Remote Keyless Entry (RKE) Transmitters
- Wireless Security Systems
- Home Applicance Control (Lighting Control, Ceiling Fans)
- Radio Remote Control (Hobby, Toys)
- Garage Door Openers
- Wireless PC Peripherals (Keyboard, Mouse)
- Telemetry (Tire Pressure, Utility Meter, Asset Tracking)

Description

The Atmel AT86RF401 Smart RF Microtransmitter is a highly integrated, low-cost RF transmitter, combined with an AVR RISC microcontroller. It requires only a crystal, a single $LiMnO_2$ coin cell (CR2032 or similar), three capacitors, an inductor and a tuned-loop antenna to implement a complete on-off keyed (OOF) wireless RF data transmitter.

Figure 1. Block Diagram

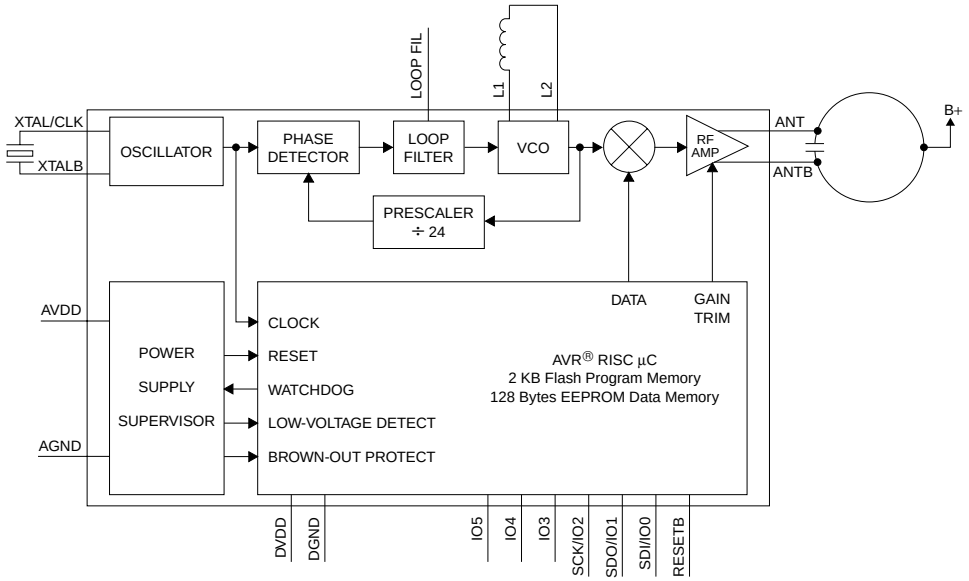

1424F–RKE–12/03

In-system programmable, nonvolatile Flash program memory and EEPROM data storage make possible rapid time-to-market and lower inventory costs.

In-system programmable, nonvolatile Flash program memory and EEPROM data storage make possible rapid time-to-market and lower inventory costs.In-system programmable, nonvolatile Flash program memory and EEPROM data storage make possible rapid time-to-market and lower inventory costs.Static current consumption is kept to a minimum with an ultra-low current shutdown mode. Normal operation resumes when a button is pressed. This activates the crystal oscillator circuit that serves as the clock for the AVR microcontroller.

The RF carrier is synthesized utilizing an on-board Voltage Controlled Oscillator (VCO). Optimal tuning of the VCO is maintained over component tolerance through the use of a software-controlled switched capacitor array. Its accuracy is maintained with a PLL detector that compares the crystal oscillator to a frequency-scaled version (divided by 24) of the RF carrier. The resulting error signal adjusts the VCO to produce a very stable RF carrier.

An interrupt-based bit-timer structure, integral to the AVR microcontroller, simplifies the implementation of user-specific, data-bit encoding routines, such as PWM or Manchester, for modulating the RF carrier. Thirty-six dB of RF power output control is available to the user in 1 dB steps and is addressable in software. The RF signal output is placed differentially on a tuned-loop antenna, which may be realized as a counterspread copper trace on a PCB.

The AT86RF401 is fabricated in Atmel's 0.6 µm Mixed Signal CMOS + EEPROM process, enabling true system-level integration (SLI).

Figure 2. 20-lead TSSOP

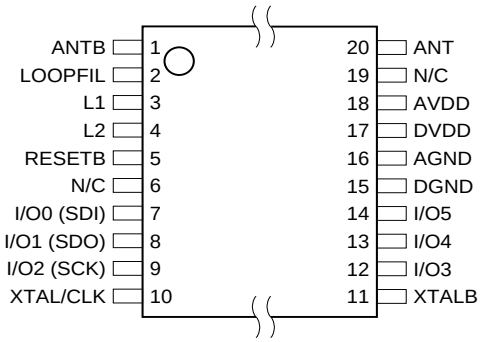

Figure 3. Sample Circuit

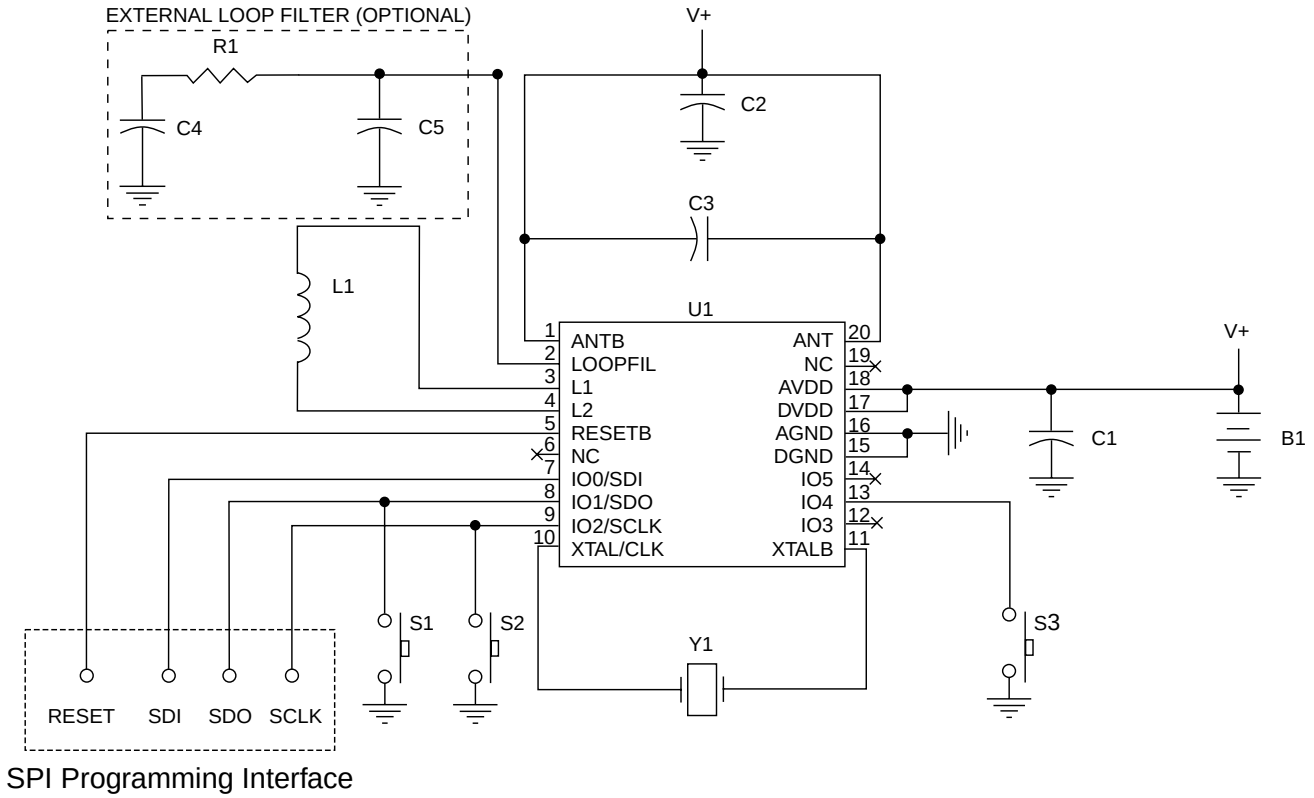

Table 1. Recommended Parts List

Part Number	Value (Common)	Value (315 MHz)	Value (433.92 MHz)	Value (Ext. Loop Filter)	Specification
B1	3.6V				CR2032, Li Battery
C1	0.01 µF				0603, X7R, ± 10%
C2	100 pF				0603, COG, ± 5%
C3		Antenna Dependent	Antenna Dependent	Antenna Dependent	0603, COG, ± 0.1 pF
C4		Not req'd	Not req'd	Frequency Dependent	0603, COG, ± 5%
C5		Not req'd	Not req'd	Frequency Dependent	0603, COG, ± 0.25 pF
L1		82 nH	39 nH	Frequency Dependent	1608, ± 5%
R1		Not req'd	Not req'd	Frequency Dependent	0603, ± 5%
S1	Switch				SPST
S2	Switch				SPST
S3	Switch				SPST
U1	AT86RF401				20-lead TSSOP
Y1		13.125 MHz	18.08 MHz	Frequency Dependent	13.125 MHz: Crystek™ P/N 016757 18.080 MHz: Crystek P/N 016758

Table 2. Pin Descriptions – 20-lead TSSOP

Symbol	Pin		Description
ANTB	1	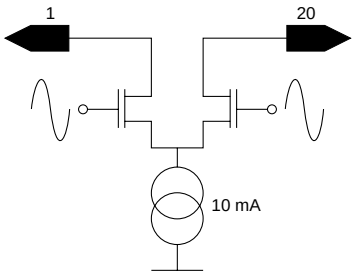	Differential Antenna Output
LOOPFIL	2	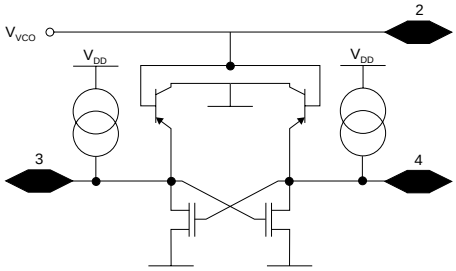	External VCO Loop-filter Connection. V_{VCO} is the VCO control voltage.
L1	3	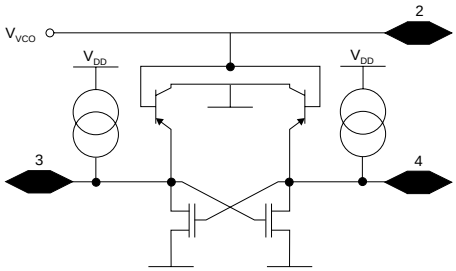	External VCO Inductor Connection. V_{VCO} is the VCO control voltage.
L2	4	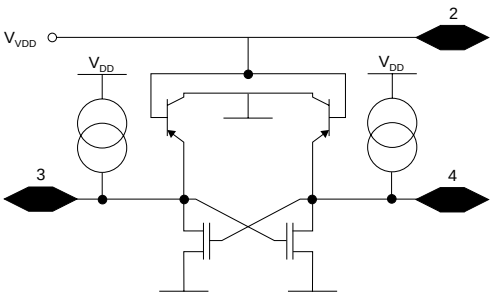	External VCO Inductor Connection. V_{VCO} is the VCO control voltage.

Table 2. Pin Descriptions – 20-lead TSSOP (Continued)

RESETB	5	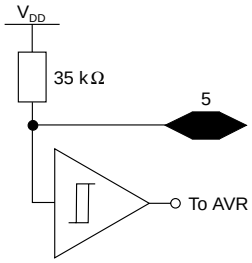	SPI Reset Input: A “low” on this pin resets the device and puts the part into SPI mode. A logic-high on this pin causes the device to execute its program if the V_{DD} is above the brown-out voltage level.
NC	6		No Connect. Float Pin.
I/O0 (SDI)	7	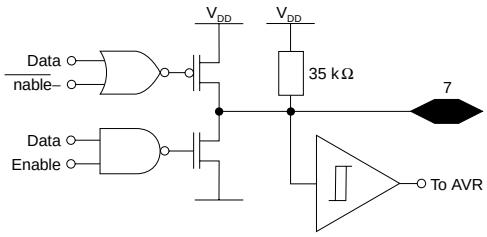	SPI Data In/Input/Output 0: General-purpose I/O and button input. In SPI mode, this pin serves as SDI (Serial Data Input).
I/O1 (SDO)	8	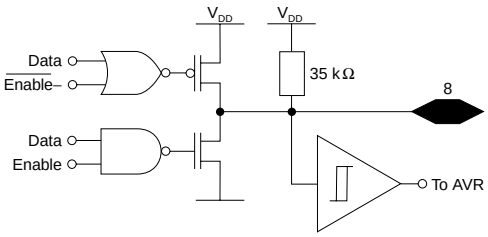	SPI Data Out/Input/Output 1: General-purpose I/O and button input. In SPI mode, this pin serves as SDO (Serial Data Output).
I/O2 (SCK)	9	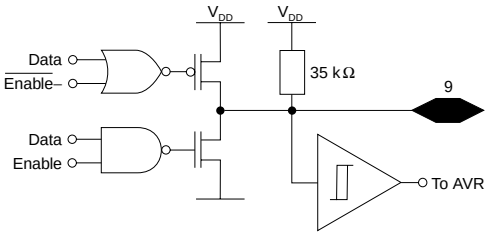	SPI Clock/Input/Output 2: General-purpose I/O and button input. In SPI mode, this pin serves as SCK (SPI Clock Input).
XTAL/CLK	10	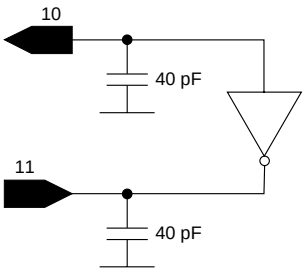	Crystal/Clock Input: Input to the inverting oscillator amplifier and input to the internal clock operating circuit. This pin may be driven externally for test purposes.

Table 2. Pin Descriptions – 20-lead TSSOP (Continued)

XTALB	11	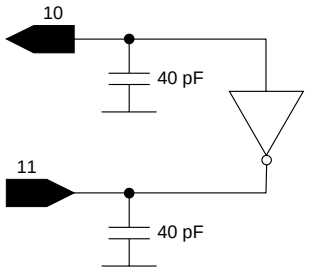	Crystal Output: Output from the inverting oscillator amplifier
IO3	12	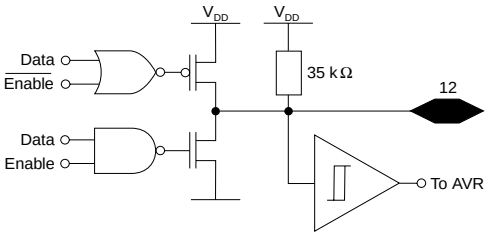	Input/Output 3: General-purpose I/O and button input
IO4	13	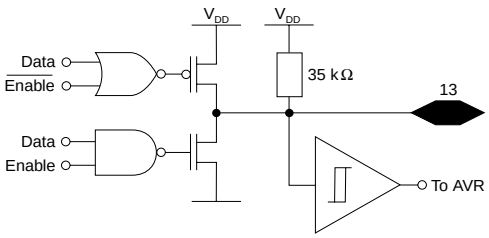	Input/Output 4: General-purpose I/O and button input
IO5	14	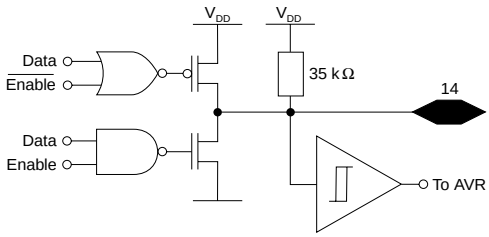	Input/Output 5: General-purpose I/O and button input
DGND	15		Digital Ground
AGND	16		Analog Ground
DVDD	17		Digital Voltage Supply

Table 2. Pin Descriptions – 20-lead TSSOP (Continued)

AVDD	18		Analog Voltage Supply
N/C	19		No Connect – Float Pin
ANT	20	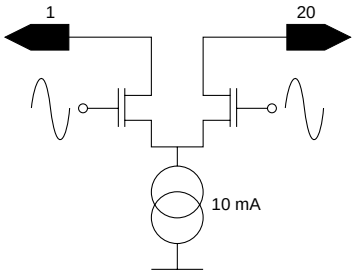	Differential Antenna Output

Absolute Maximum Ratings*

Antenna Voltage (Pins 1, 20) ..... –1V to 10V

Operating Temperature ..... –40°C to +85°C

Storage Temperature (without bias) ..... –55°C to +125°C

Voltage on V_{DD} with respect to ground 6.0V

Voltage on Pins 2–19 (TSSOP 20) ..... –0.1 to V_{DD} +0.3V

*NOTICE: Stresses beyond those listed under "Absolute Maximum Ratings" may cause permanent damage to the device. This is a stress rating only; functional operation of the device at these or other conditions beyond those indicated in the operational sections of this specification is not implied. Exposure to absolute maximum rating conditions for extended periods may affect device reliability.

Table 3. DC Characteristics
V_{DD} = 3.3V; f_{XTAL} = 13.125 MHz; $f_{AVR} = f_{XTAL} \div 16$; T_A = 25°C unless otherwise specified.

Symbol	Parameter	Conditions	Min	Typ	Max	Unit
Supply						
V_{DD}	Supply Voltage		2.0	3.3	5.0	V
I_{DD}	Standby Current (off)	V_{DD} = 3.3V T_A = 25°C	–	0.1	0.5	µA
	AVR Active		–	3.4	–	mA
	Frequency Synthesizer + AVR Active		–	14.3	–	mA
	Transmit (FS, AVR and Power Amp active)	CW modulation	–	23.2	–	mA
Digital Inputs (SDI, SCK, RESETB, IOx)						
V_{IH}	High-level Input Voltage		0.8* V_{DD}	–	V_{DD}	V
V_{IL}	Low-level Input Voltage		0	–	0.2* V_{DD}	V
I_{IH}	High-level Input Current	$V_{IH} = V_{DD}$, V_{DD} = 5.0V	–	–	1	µA
I_{IL}	Low-level Input Current	V_{IL} = 0V, V_{DD} = 5.0V	–140	–	–	µA
Digital Outputs (SDO, IOx)						
V_{OH}	High-level Output Voltage	I_{OH} = –500 µA	V_{DD} –0.4	–	–	V
V_{OL}	Low-level Output Voltage	I_{OL}= 2 mA	–	–	0.4	V
Microcontroller/System						
t_{TX}	Time from Button Wake-up to RF Outputs Active		–	0.5	1.0	ms
f_{AVR}	AVR Clock Frequency		–	–	1.25	MHz
EE_{LIFE}	EEPROM Retention	Initial programming conditions: V_{DD} = 3.3V ± 10% Temp = 25°C ± 10%	–	–	10	years
EE_{CYCLES}	EEPROM Write/Erase Endurance	2.0V ≤ V_{DD} ≤ 5.0V –40°C ≤ Temp ≤ 85°C	–	–	100,000	cycles

Table 4. Analog/RF Specs

V_{DD} = 3.3V; f_{XTAL} = 13.125 MHz; $f_{AVR} = f_{XTAL} \div 16$; T_A = 25°C unless otherwise specified.

Symbol	Parameter	Conditions	Min	Typ	Max	Unit
RF Amplifier						
I_{PA}	Power Amp Output Current	Transmitting (RF "ON"), 0 dB Attenuation	–	8.6	–	mA
$P_{CTLRANGE}$	Power Control Range		–	36	–	dB
P_{CTLRES}	Power Control Resolution		–	1	–	dB
Crystal Oscillator						
f_{OSC}	Oscillation Frequency Range		11	–	19	MHz
Frequency Synthesizer/PLL						
F_{OUT}	Output Frequency Range		264	–	456	MHz
P_{HARM}[1]	Harmonics	I/O Pins Static during RF Transmission Using PCB Trace Antenna	–	–60	–	dBc
f_{MOD}	OOK Modulation Data Rate	Using Manchester Data Bit Encoding	–	–	10	Kbps

Note: 1. Characterized but not guaranteed by test due to dependency on PCB trace antenna

Functional Description

The complete circuit consists of the following functional blocks.

Transmitter

Crystal Oscillator

The crystal oscillator circuit is designed to work with crystals with fundamental frequencies between 11 and 19 MHz. Forty pF of internal capacitance is connected between each of the crystal input pins and (chip) ground. Alternatively, an external clock can be used for these functions.

This circuit provides the master clock for the entire chip. A programmable divider is used to provide the AVR system clock.

Radio Frequency Power Amplifier

The RF power amplifier generates a differential output suitable for driving an off-chip tuned-loop antenna from the PLL output. The PLL output signal is gated using on-off keyed (OOK) modulation before transmission. It is used as the RF carrier frequency for the transmitted data stream. The amplifier can be configured via software to reduce the power output by 36 dB (with 1 dB resolution).

Frequency Synthesizer

The frequency synthesizer utilizes a PLL, which consists of a phase detector, a ÷24 prescaler, an on-chip loop filter and an integrated VCO. The VCO output is buffered prior to the output amplifier. The output frequency is 24 times the crystal frequency. To offset component tolerance, a switched capacitor array is connected between pins 3 and 4 of the VCO. Thirty-two discrete steps of capacitance are available to tune the VCO control voltage. An internal window comparator monitors the magnitude of the tuning voltage and is used by the AVR core to determine the optimal tuning configuration.

Lock Detector

The lock detection block provides an indication of the state of the phase lock loop (PLL). Lock condition is determined by counting the number of cycle slips in a given time

period. A number of registers are available to adjust the performance of the lock detector. These include lock delay and unlock delay timers as well as a cycle slip counter.

Bandgap Reference

The device uses a 1.2V (nominal) bandgap reference generator to provide consistent performance over a wide range of input supply voltages. This reference voltage is used throughout the device.

Brown-out Protection/Low Battery Detection

The brown-out protection and low battery detection functions consist of a voltage reference, a sampling block and an autozero comparator. The circuit's primary operating mode is brown-out protection.

Brown-out Protection

The brown-out protection circuit detects when the level of V_{DD} drops below the minimum voltage that guarantees proper operation. The brown-out voltage for this device is typically 1.8 volts.

If a brown-out occurs, the device enters a reset state. It stays in this state until either of the following occurs:

- The level of V_{DD} increases ~0.1–0.2 volts above the brown-out voltage. This causes the device to enter a warm reboot state.
- The level of V_{DD} drops to ~0 volts, then increases above the POR level. This places the device into the "cold start" mode of operation, identical to battery insertion.

Low Battery Detection

The low battery detection feature allows the programmer to select a voltage threshold (1.5–2.7 volts) for V_{DD} at which a warning flag is issued to the user. For example, this warning may be utilized to activate an I/O port or to change the transmitted message.

Additionally, the programmer has the option of defining the amount of hysteresis on this threshold. More detail can be found in register descriptions for I/O Enable (IO_ENAB, $30, page 39) and Battery Low Configuration (BL_CONFIG, $35, page 42).

Bit Timer

A hardware assist has been included in the AT86RF401 to make transmission of data easier. Keying of the transmitter is timed by this logic, and interrupts are generated when data is needed by the timer or when transmission is complete. The timer also supports code that uses polling instead of interrupts. Using polling instead of interrupts may facilitate higher bit rates. Additionally, this timer may be used to time pulses arriving at the I/O3 pin. This enables the AT86RF401 to be used to decode the signal detected by an external receiver chip. For additional information on how to implement the bit timer, see *AT86RF401 Bit Timer Application Note,* available at *www.atmel.com.*

Bit Timer in Transmit Mode

Bit coding is done by the AVR before data is sent to the bit timer. Bit timing is controlled by the count value in the Bit Timer Count (BTCNT) register and the two most significant bits in the Bit Timer Control Register (BTCR). Generally the time of each bit is:

$$P_{xx} = P \times (countval + 1)$$

where P_{xx} is the period of each time slot and *countval* is the counter value in the BTCNT and BTCR registers. *P* is the AVR clock period that is set in the PWR_CTL register. *countval* = {BTCR[7:6], BTCNT[7:0]}.

There are two interrupts associated with transmit mode:

1. Transmit Buffer Empty Interrupt: This vectors to address 0x04. Flag 0 is set, and, if enabled, this interrupt is generated when the timer removes the value from the DATA bit in the BTCR. This interrupt service routine should load the next transmit bit into the DATA bit in the BTCR.
2. TXDONE Interrupt: This vectors to address 0x02. Flag 2 is set, and, if enabled, an interrupt is generated when the counter has counted down to zero and the buffer is empty. This indicates that the transmission is complete. This interrupt service routine should turn off the transmitter and turn off the bit timer using the mode bits.

Bit Timer in Receive Mode

When put into receive mode, the bit timer times pulses arriving at the I/O3 pin. When enabled, the counter counts up from zero and places that value in the BTCNT register when an edge occurs. If the edge is rising, the DATA bit in the BTCR is set. If the edge is falling, the DATA bit in the BTCR is reset. This mode may be used to decode signals from a receiver chip easily.

Bit Timer in Generic Timer/Counter Mode

The bit timer may be used as a generic timer by not allowing it to key off the transmitter. An interrupt is generated after the amount of time dictated by the count value.

Watchdog Timer

When enabling the watchdog timer, the status of the watchdog time is unknown. The user is advised to execute a WDR instruction before enabling the watchdog. Otherwise, the device might get reset before the first WDR after enabling is reached. To prevent the unintentional disabling of the watchdog, a special turn-off procedure must be followed when the watchdog is disabled. Refer to the description of the Watchdog Timer Control Register on page 38 for details (see Register $22 in I/O Memory). The watchdog timer prescaler determines the number of system clocks that occur before the watchdog reset is asserted. The system clock is determined by Bits[7:5] of the AVR_CONFIG register.

Reset and Interrupt Handling

The AT86RF401 Reset and Interrupt vectors are defined in Table 5. The I-bit in the status register must be set to enable the interrupts.

Table 5. Reset and Interrupt Vectors

Vector Number	Program Address	Source	Interrupt Definition
1	$000	RESETB, Watchdog, Buttons	Hardware Pin or Watchdog or Button Reset
2	$002	Transmission Done (TXDONE)	Bit Timer Flag 2 Interrupt
4	$004	Transmit Buffer Empty	Bit Timer Flag 0 Interrupt

The most typical and general program setup for the Reset and Interrupt Vector Addresses are:

```
Address   Labels    Code                    Comments
$000                jmp      RESET          ; Reset handler
$002                jmp      BT_F2_ISR      ; Bit timer flag 2 interrupt service routine
$004                jmp      BT_F0_ISR      ; Bit timer flag 0 interrupt service routine
$006  MAIN:         <instr>  xxx            ; Main program start
  …          …          …      …
```

Reset Sources

The AT86RF401 has several sources of reset:

- Power-on Reset: The device is reset when the supply voltage is applied between the VDD and GND pins. There are 10^6 cycles of delay between Power-on Reset occurring and the part becoming active. This is to ensure that the power is stable.
- External Reset: The device is reset when a logic low level is present on the RESETB pin. This resets all I/O Registers and puts the part into SPI mode. The I/O Registers may be read and written by the SPI interface after two AVR System Clocks.
- Watchdog Reset: This is similar to power-on reset but is caused by the watchdog timer and does not have a 10^6 cycle delay prior to becoming active.
- Brown-out Reset: This is caused by the battery voltage dropping below the Brown-out Threshold voltage trip point.
- Button Reset (software reset): The part is placed into a special reset state by software. The part is released from reset when a properly configured button is activated, and the part is not in external reset or brown-out reset. In the button reset state, most I/O registers are not reset, and there is no time delay before becoming active.

During power-on reset and watchdog reset, all I/O registers are set to their initial values, and the program starts execution from address $000.

Note: The instruction placed in address $000 must be an RJMP (relative jump) instruction or a JMP (absolute jump) to the reset handling routine. If an RJMP or JMP instruction is not present at address $000, the part is placed into a “no program” reset state. This is to protect the part from fetching instructions when no program is present.

Interrupt Response Time

The interrupt execution response for all the enabled AVR interrupts is a minimum of four clock cycles. After the four clock cycles, the program vector address for the actual interrupt handling routine is executed. During this four clock cycle period, the Program Counter is pushed onto the stack. The vector is a jump to the interrupt routine, and this jump takes two clock cycles. If an interrupt occurs during execution of a multi-cycle instruction, this instruction is completed before the interrupt is served.

A return from an interrupt handling routine takes four clock cycles. During these four clock cycles, the Program Counter is popped back from the stack. When AVR exits from an interrupt, it will always return to the main program and execute one more instruction before any pending interrupt is served.

Note: The Status Register (SREG) is not saved by the AVR hardware. This must be performed by user software when required.

Memory Programming

Program Memory Lock Bits

The AT86RF401 microtransmitter provides two lock bits that can be left unprogrammed (“1”) or can be programmed (“0”) to obtain the additional features listed in Table 6.

Table 6. Lock Bit Protection Modes

Program Lock Bits			
Mode	**LB1**	**LB2**	**Protection Type**
1	1	1	No program lock features
2	0	1	Further serial (SPI) programming of the EEPROM is disabled (both program and data memory).
3	0	0	Same as mode 2, but Verify is also disabled

Note: The lock bits can only be erased with the Chip Erase operation.

In-system Flash and EEPROM

The AT86RF401 offers 2 Kbytes (1K x 16) of in-system reprogrammable Flash program memory and 128 bytes of EEPROM data memory. This memory can be programmed serially via the SPI interface.

SPI Interface

Both the program and data memory arrays can be programmed using the serial SPI bus while RESETB is pulled to GND. The serial interface consists of pins SCK, SDI (input) and SDO (output).

When programming, an auto-erase cycle is built into the self-timed programming operation, and there is no need to first execute the Chip Erase instruction. The Chip Erase operation sets every memory location in the EEPROM array to $FF.

Either an external system clock is supplied at pin XTAL/CLK or a crystal needs to be connected across pins XTAL/CLK and XTALB. The minimum low and high periods for the serial clock (SCK) input are defined as follows:

Low: 4 XTAL Clock Cycles *High:* 16 XTAL Clock Cycles

Serial Programming Algorithm

Refer to Figure 4 (page 15), Figure 5 (page 16) and Figure 6 (page 17). To program and verify the AT86RF401 in the serial programming mode, the following sequence is recommended.

Power-up Sequence:

1. Apply power between VDD and GND while RESETB and SCK are set to “0”. If a crystal is not connected across pins XTAL and XTALB, apply a clock signal to the XTAL pin. If the programmer can not guarantee that SCK is held low during power-up, RESETB must be given a positive pulse after SCK has been set to “0”.
2. Wait for at least 20 ms and enable serial programming by sending the Programming Enable instruction to pin SDI. This must occur prior to any program/erase operations.
3. If a chip erase is performed, wait 4 ms, give RESETB a positive pulse and start over again from Step 2.
4. The array is programmed one byte at a time by supplying the address and data together with the appropriate Write instruction. The memory location is first automatically erased before new data is written. The next byte can be written after 4 ms.
5. Any memory location can be verified by using the Read instruction, which returns the content at the selected address at serial output SDO.
6. At the end of the programming session, RESETB must be set high to commence normal operation.

Signature Bytes

All Atmel microcontrollers have a three-byte signature code that identifies the device. For the AT86RF401, the signature bytes are:

- 0x000: 0x1E (indicates manufactured by Atmel)
- 0x001: 0x91 (indicates 2 Kbytes Flash program memory)
- 0x002: 0x81 (indicates AT86RF401 when 0x001 is 0x91)

Data EEPROM Access from the AVR

Table 7. AT86RF401 Serial Programming Instruction Set

Instruction	Instruction Format				Operation
	Byte 1	Byte 2	Byte 3	Byte 4	
Programming Enable	1010 1100	0101 0011	xxxx xxxx	xxxx xxxx	Enable Serial Programming after RESETB goes low.
Chip Erase	1010 1100	100x xxxx	xxxx xxxx	xxxx xxxx	Chip erase EEPROM
Read Program Memory	0010 **H**000	0000 00**aa**	bbbb bbbb	oooo oooo	Read **H** (high or low) data **o** from Program memory at word address **a:b**
Write Program Memory	0100 **H**000	0000 00**aa**	bbbb bbbb	iiii iiii	Write **H** (high or low) data **i** to Program memory at word address **a:b**
Read EEPROM Memory	1010 0000	0000 0000	x**bbb bbbb**	oooo oooo	Read data **o** from EEPROM memory at address **b**
Write EEPROM Memory	1100 0000	0000 0000	x**bbb bbbb**	iiii iiii	Write data **i** to EEPROM memory at address **b**
Write Lock Bits	1010 1100	111x x***21***x	xxxx xxxx	xxxx xxxx	Write lock bits. Set bits **21** = “0” to program lock bits.
I/O Read	10110000	0000 0000	00bbbbbb	oooo oooo	Read data 0 from I/O memory address **b**
I/O Write	11010000	0000 0000	00bbbbbb	iiii iiii	Write data i to I/O memory address **b**
Read Signature Byte	0011 0000	000x xxxx	xxxx xxbb	oooo oooo	

Note: **a** = address high bits
b = address low bits
H = 0: Low byte, 1: High byte
o = data out
i = data in
x = don’t care
1= lock bit 1
2= lock bit 2

Figure 4. Serial Programming and Verify

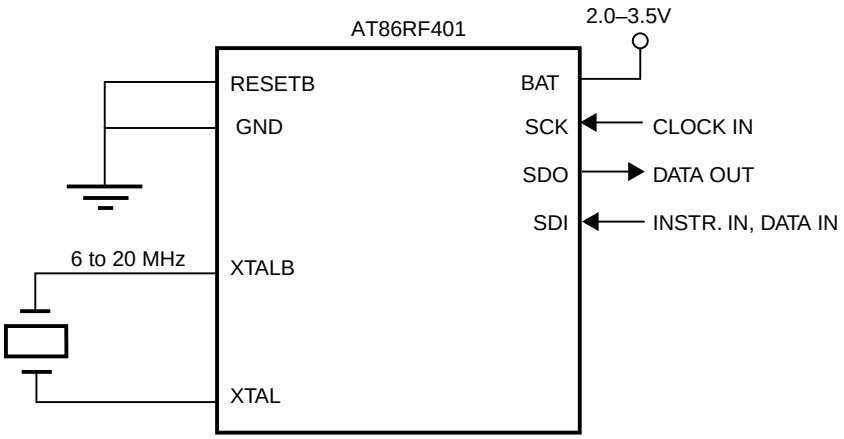

Notes: 1. When *writing*, data is clocked on the *rising* edge of CLK.
2. When *reading*, data is clocked on the *falling* edge of CLK. See Figure 5 for an explanation.

Figure 5. Serial Programming Waveforms

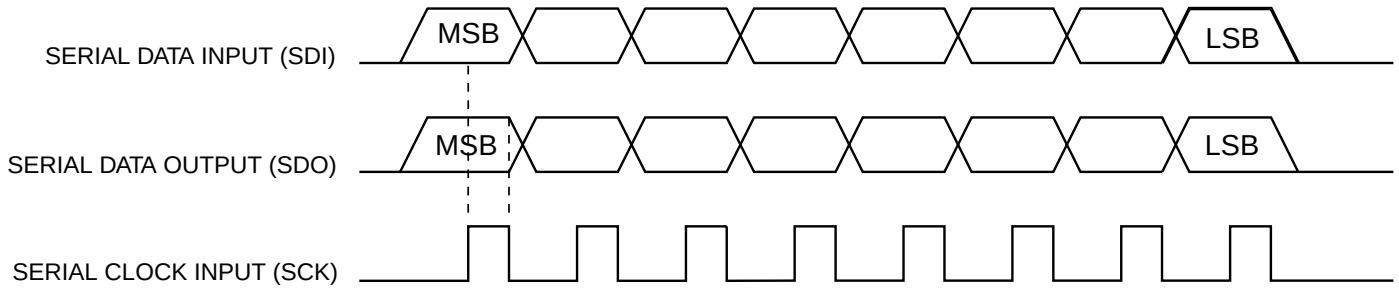

Note: This device includes an integrated 128-byte EEPROM, which is accessed by three registers located in the I/O memory space. These are the DEECR, DEEDR and DEEAR registers. For more information, refer to I/O Register Description.

AVR Core

Architectural Overview

The fast-access register file concept contains 32 x 8-bit general-purpose working registers with a single clock cycle access time. This means that during one single clock cycle, one Arithmetic Logic Unit (ALU) operation is executed. Two operands are output from the register file, the operation is executed, and the result is stored back in the register file in one clock cycle.

Six of the 32 registers can be used as three 16-bit indirect address register pointers for Data Space addressing, enabling efficient address calculations. One of the three address pointers is also used as the address pointer for look-up tables in Flash program memory. These added function registers are the 16-bit X-register, Y-register and Z-register.

The ALU supports arithmetic and logic operations between registers or between a constant and a register. Single register operations are also executed in the ALU. Figure 6 shows the AT86RF401 AVR architecture.

In addition to the register operation, the conventional memory addressing modes can be used on the register file as well. This is enabled by the fact that the register file is assigned the 32 lowest data space addresses ($00–$1F), allowing them to be accessed as though they were ordinary memory locations.

The I/O memory space contains 64 addresses for CPU peripheral functions as Control Registers, Timer/Counters, A/D converters and other I/O functions. The I/O Memory can be accessed directly or as the Data Space locations following those of the register file, $20–$5F.

Figure 6. AVR Core Architecture

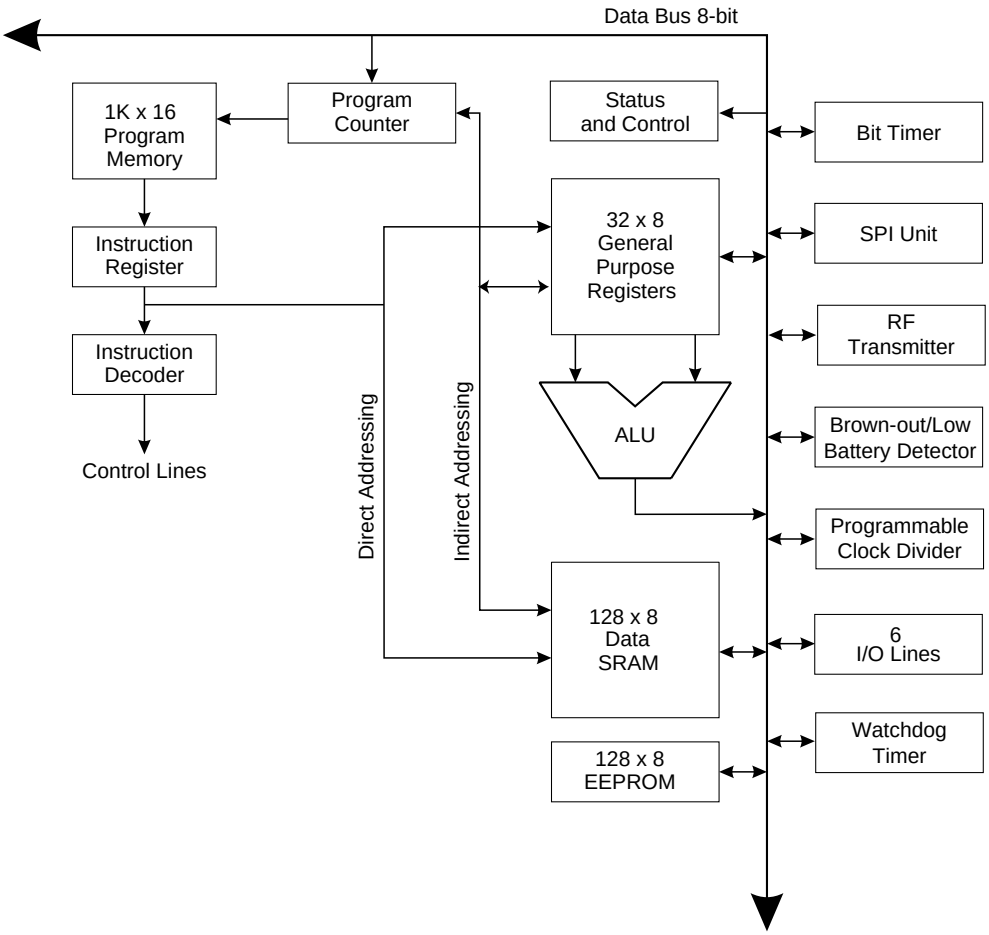

The AVR uses a Harvard architecture concept, with separate memories and buses for program and data. The program memory is executed with a two-stage pipeline. While one instruction is being executed, the next instruction is prefetched from the program memory. This concept enables instructions to be executed in every clock cycle. The program memory is in-system, reprogrammable Flash memory.

With the jump and call instructions, the whole 1K word address space is directly accessed. Most AVR instructions have a single 16-bit word format. Every program memory address contains a 16- or 32-bit instruction.

During interrupts and subroutine calls, the return address program counter (PC) is stored on the stack. The stack is effectively allocated in the general data SRAM, and consequently the stack size is only limited by the total SRAM size and the usage of the SRAM. All user programs must initialize the SP in the reset routine (before subroutines or interrupts are executed). The 7-bit stack pointer SP is read/write accessible in the I/O space.

The 128-byte data SRAM can be easily accessed through the five different addressing modes supported in the AVR architecture.

The memory spaces in the AVR architecture are all linear and regular memory maps.

A flexible interrupt module has its control registers in the I/O space with an additional global interrupt enable bit in the status register. All interrupts have a separate interrupt vector in the interrupt vector table at the beginning of the program memory. The interrupts have priority in accordance with their interrupt vector position; the lower the interrupt vector address, the higher the priority.

Figure 7. Memory Maps

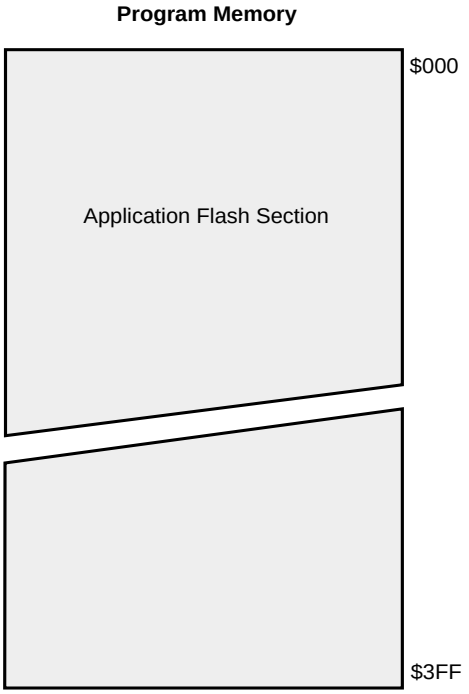

General-purpose Register File

Figure 8 shows the structure of the 32 general-purpose working registers in the CPU.

Figure 8. AVR CPU General-purpose Working Registers

7 0	Addr.	
R0	$00	
R1	$01	
R2	$02	
…		
R13	$0D	
R14	$0E	
R15	$0F	
R16	$10	
R17	$11	
…		
R26	$1A	X-register low byte
R27	$1B	X-register high byte
R28	$1C	Y-register low byte
R29	$1D	Y-register high byte
R30	$1E	Z-register low byte
R31	$1F	Z-register high byte

All the register operating instructions in the instruction set have direct and single cycle access to all registers. The only exception is the five constant arithmetic and logic instructions (SBCI, SUBI, CPI, ANDI and ORI) between a constant and a register, and the LDI instruction for load immediate constant data. These instructions apply to the second half of the registers in the register file, R16...R31. The general SBC, SUB, CP, AND and OR and all other operations between two registers or on a single register apply to the entire register file.

As shown in Figure 9, each register is also assigned a data memory address, mapping the registers directly into the first 32 locations of the user data space. Although not being physically implemented as SRAM locations, this memory organization provides great flexibility in access of the registers, as the X, Y and Z registers can be set to index any register in the file.

The X, Y and Z Registers

The registers R26...R31 have some added functions to their general-purpose usage. These registers are address pointers for indirect addressing of the data space. The three indirect address registers X, Y and Z are defined as shown in Figure 9.

Figure 9. The X, Y and Z Registers

	15	**XH**	**XL**	**0**
X Register	**70**	**0**	**7**	**0**
	R27 ($1B)		**R26 ($1A)**	
	15	**YH**	**YL**	**0**
Y Register	**70**	**0**	**7**	**0**
	R29 ($1D)		**R28 ($1C)**	
	15	**ZH**	**ZL**	**0**
Z Register	**70**	**0**	**7**	**0**
	R30 ($1F)		**R31 ($1E)**	

In the different addressing modes, these address registers have functions as fixed displacement, automatic increment and decrement (see the descriptions for the different instructions).

Arithmetic Logic Unit (ALU)

The high-performance AVR ALU operates in direct connection with all the 32 general-purpose working registers. Within a single clock cycle, ALU operations between registers in the register file are executed. The ALU operations are divided into three main categories: arithmetic, logical and bit-functions. The multiplier is not present in this version of the core. Therefore, the MUL instruction is not supported.

In-system Self-programmable Flash Program Memory

The AT86RF401 contains 2 Kbytes of on-chip Flash memory for program storage. Since all instructions are 16- or 32-bit words, the Flash is organized as 1K x 16.

The Flash memory has an endurance of at least 1000 write/erase cycles. The PC is 10 bits wide, thus addressing the 1024 program memory locations. See the Memory Programming section (page 13) for a detailed description on Flash data serial downloading.

Constant tables can be allocated within the entire program memory address space (see Table 22, Instruction Set, page 45).

SRAM Data Memory

Figure 10 shows how the AT86RF401 SRAM memory is organized.

Figure 10. SRAM Organization

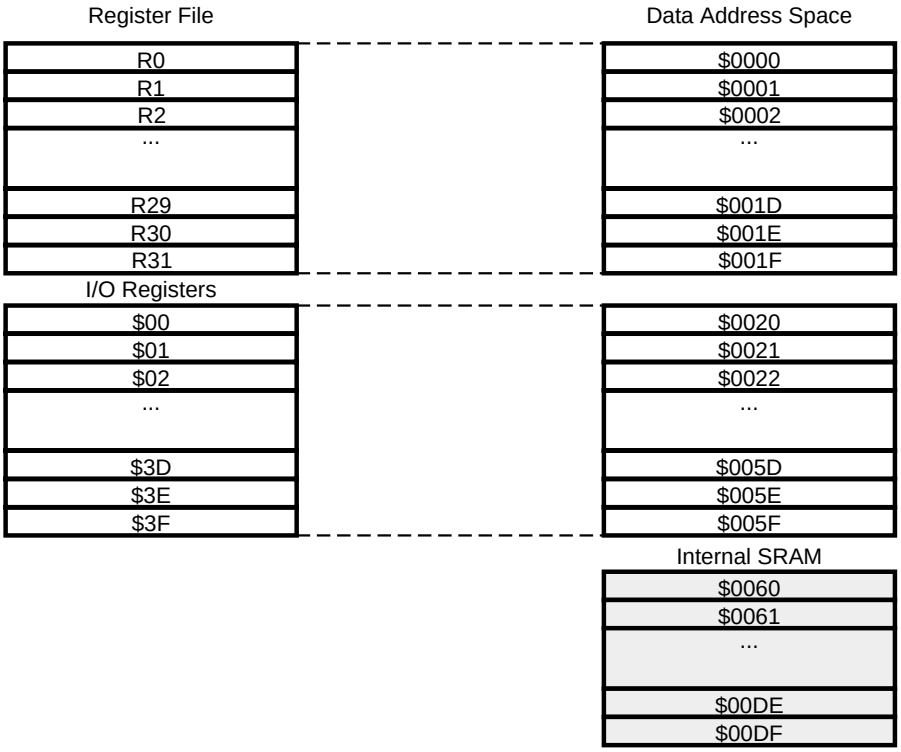

The lower 224 Data Memory locations address the Register File, the I/O Memory and the internal data SRAM. The first 96 locations address the Register File + I/O Memory, and the next 128 locations address the internal data SRAM.

The five different addressing modes for the data memory cover: Direct, Indirect with Displacement, Indirect, Indirect with Pre-decrement, and Indirect with Post-increment. In the register file, registers R26 to R31 feature the indirect addressing pointer registers.

The direct addressing reaches the entire data space.

The Indirect with Displacement mode features a 63 address locations reach from the base address given by the Y or Z register.

When using register indirect addressing modes with automatic pre-decrement and post-increment, the address registers X, Y and Z are decremented and incremented.

The 32 general-purpose working registers, 64 I/O registers and the 128 bytes of internal data SRAM in the AT86RF401 are all accessible through all these addressing modes.

Program and Data Addressing Modes

The AT86RF401 AVR Enhanced RISC microcontroller supports powerful and efficient addressing modes for access to the program memory (Flash) and data memory (SRAM, Register File and I/O Memory). This section describes the different addressing modes supported by the AVR architecture. In the figures, OP means the operation code part of the instruction word. To simplify, not all figures show the exact location of the addressing bits.

Register Direct, Single Register Rd

Figure 11. Direct Single Register Addressing

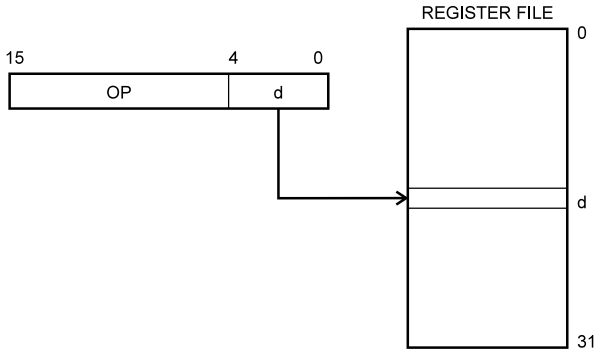

The operand is contained in register d (Rd).

Register Direct, Two Registers Rd and Rr

Figure 12. Direct Register Addressing, Two Registers

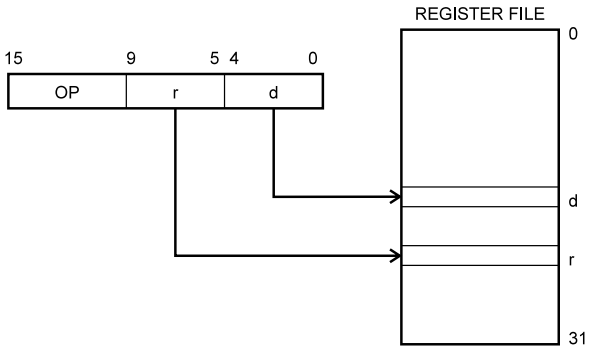

Operands are contained in register r (Rr) and d (Rd). The result is stored in register d (Rd).

I/O Direct

Figure 13. I/O Direct Addressing

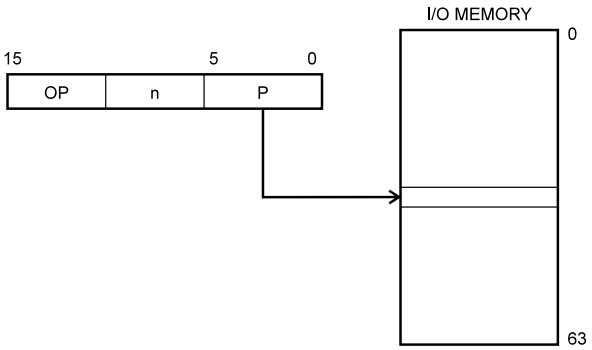

Operand address is contained in 6 bits of the instruction word. “n” is the destination or source register address.

Data Direct

Figure 14. Direct Data Addressing

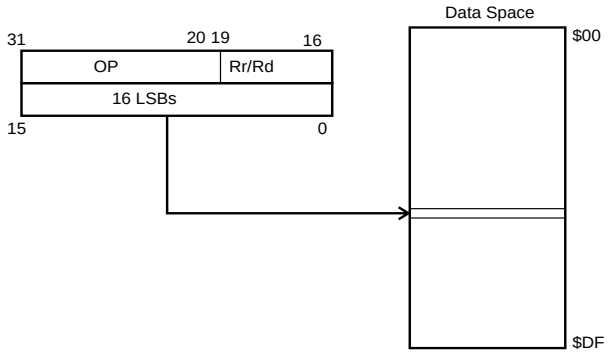

A 16-bit Data Address is contained in the 16 LSBs of a two-word instruction. Rd/Rr specify the destination or source register.

Data Indirect with Displacement

Figure 15. Data Indirect with Displacement

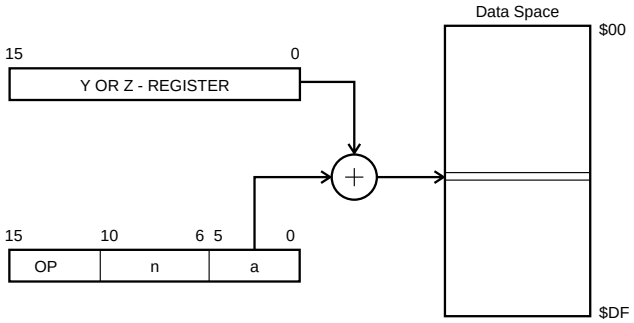

Operand address is the result of the Y or Z register contents added to the address contained in 6 bits of the instruction word.

Data Indirect

Figure 16. Data Indirect Addressing

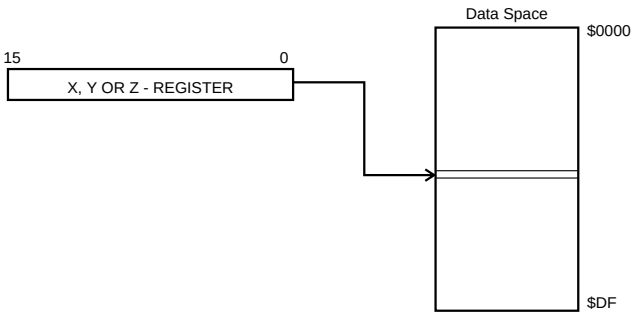

Operand address is the contents of the X, Y or Z register.

Data Indirect with Pre-decrement

Figure 17. Data Indirect Addressing with Pre-decrement

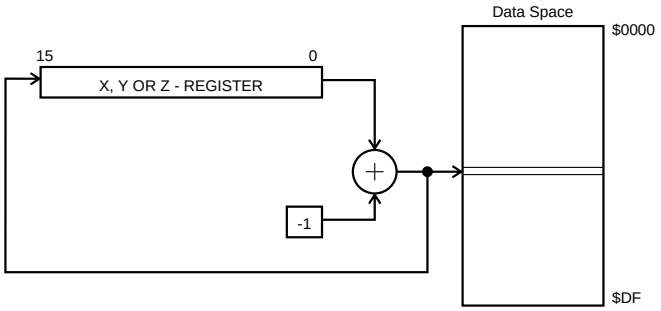

The X, Y or Z register is decremented before the operation. Operand address is the decremented contents of the X, Y or Z register.

Data Indirect with Post-increment

Figure 18. Data Indirect Addressing with Post-increment

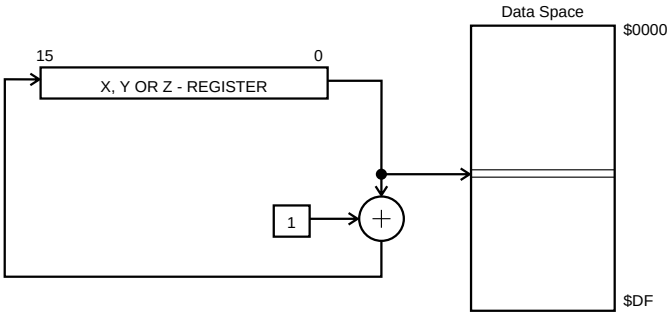

The X, Y or Z register is incremented after the operation. Operand address is the content of the X, Y or Z register prior to incrementing.

Constant Addressing Using the LPM Instruction

Figure 19. Code Memory Constant Addressing

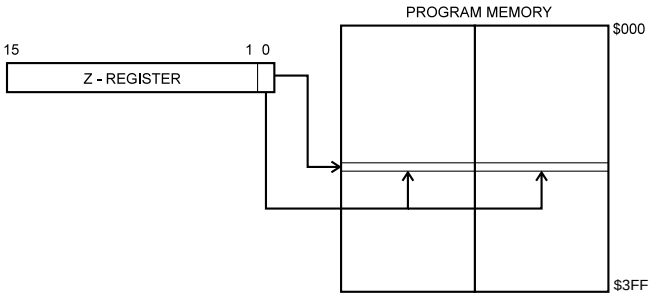

Constant byte address is specified by the Z register contents. The 10 MSBs select word address (0–1K). For LPM, the LSB selects low byte if cleared (LSB = 0) or high byte if set (LSB = 1).

Indirect Program Addressing, IJMP and ICALL

Figure 20. Indirect Program Memory Addressing

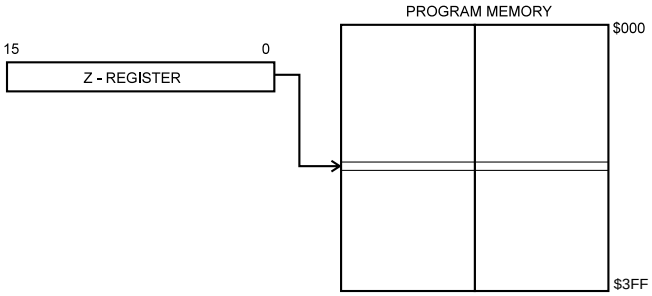

Program execution continues at address contained by the Z register (i.e., the PC is loaded with the contents of the Z register).

Relative Program Addressing, RJMP and RCALL

Figure 21. Relative Program Memory Addressing

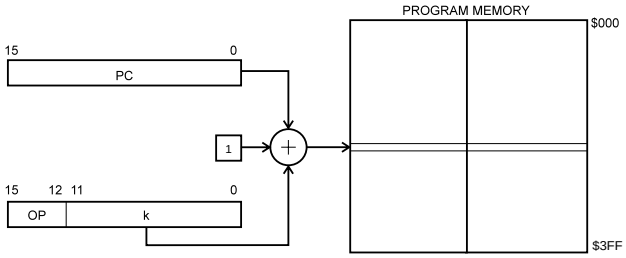

Program execution continues at address PC + k + 1. The relative address k is from –2048 to 2047.

EEPROM Data Memory

The AT86RF401 contains 128 bytes of data EEPROM memory. It is organized as a separate data space in which single bytes can be read and written. The access between the EEPROM and the CPU is described in the Memory Programming section (page 13).

Memory Access Times and Instruction Execution Timing

This section describes the general access timing concepts for instruction execution and internal memory access.

The AVR CPU is driven by the System Clock Ø generated from the main oscillator for the chip. A programmable clock divider generates this clock from the crystal oscillator input.

Figure 22 shows the parallel instruction fetches and instruction executions enabled by the Harvard architecture and the fast-access register file concept. This is the basic pipelining concept to obtain up to 1 MIPS per MHz with the corresponding unique results for functions per cost, functions per clocks and functions per power unit.

Figure 22. The Parallel Instruction Fetches and Instruction Executions

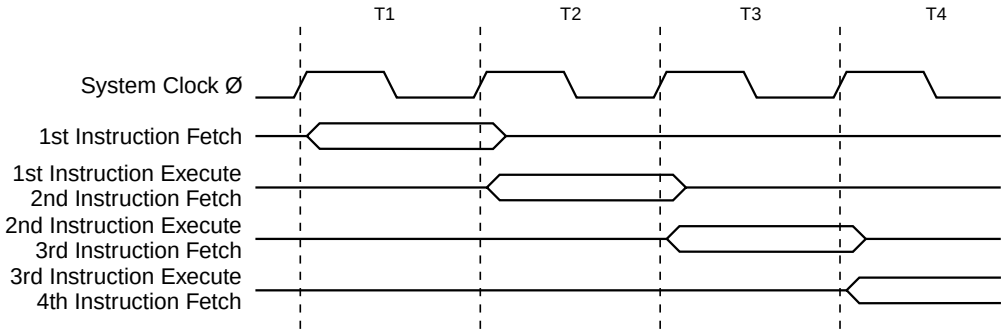

Figure 23 shows the internal timing concept for the register file. In a single clock cycle, an ALU operation using two register operands is executed, and the result is stored back to the destination register.

Figure 23. Single Cycle ALU Operation

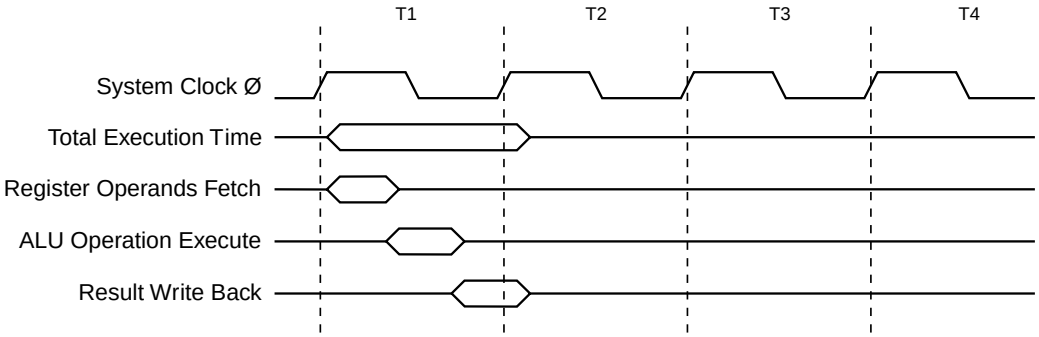

The internal data SRAM access is performed in two System Clock cycles as described in Figure 24.

Figure 24. On-chip Data SRAM Access Cycles

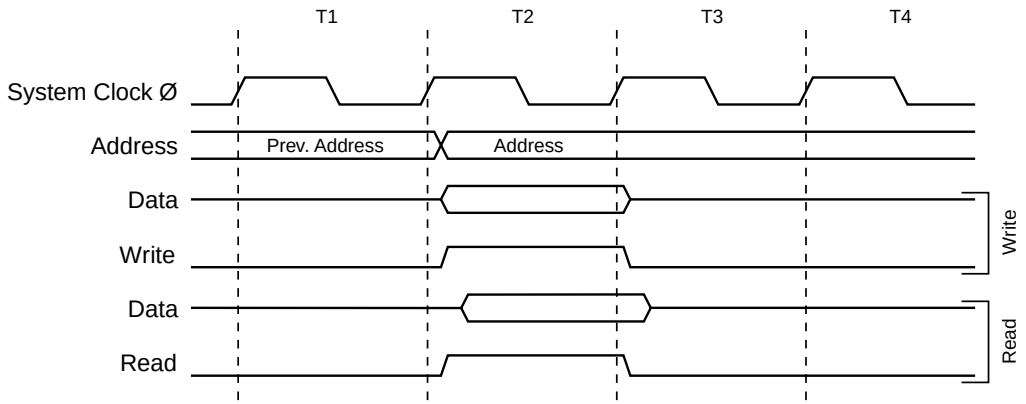

All I/Os and peripherals are placed in the I/O space. The I/O locations are accessed by the IN and OUT instructions, transferring data between the 32 general-purpose working registers and the I/O space. I/O registers within the address range $00–$1F are directly bit-accessible using the SBI and CBI instructions. In these registers, the value of single bits can be checked by using the SBIS and SBIC instructions. Refer to Table 10, “Instruction Set Manual,” on page 44 for more details. When using the I/O specific commands IN and OUT, the I/O addresses $00–$3F must be used. When addressing I/O registers as SRAM, $20 must be added to these addresses.

For compatibility with future devices, reserved bits should be written to “0” if accessed. Reserved I/O memory addresses should never be written.

Some of the status flags are cleared by writing a logical “1” to them. Note that the CBI and SBI instructions will operate on all bits in the I/O register, writing a “1” back into any flag read as set, thus clearing the flag. The CBI and SBI instructions work with registers $00 to $1F only.

The I/O and peripherals control registers are explained in the following sections.

I/O Memory

The I/O space definition of the AT86RF401 is shown in Table 8 below.

Table 8. AT86RF401 I/O Space Definitions

Address Hex	Name	Function
$3F	SREG	Status Register
$3E	SPH	Stack Pointer High Register (program to 0 x 00)
$3D	SPL	Stack Pointer Low Register
$35	BL_CONFIG	Battery Low Configuration Register
$34	B_DET	Button Detect Register
$33	AVR_CONFIG	AVR Configuration Register
$32	IO_DATIN	I/O DATA IN Register
$31	IO_DATOUT	I/O DATA OUT Register
$30	IO_ENAB	I/O Enable Register
$22	WDTCR	Watchdog Timer Control Register
$21	BTCR	Bit Timer Control Register
$20	BTCNT	Bit Timer Count Register
$1E	DEEAR	Data EEPROM Address Register
$1D	DEEDR	Data EEPROM Data Register
$1C	DEECR	Data EEPROM Control Register
$17	LOCKDET2	Lock Detector Configuration Register 2
$16	VCOTUNE	VCO Tuning Register
$14	PWR_ATTEN	Power Attenuation Control Register
$12	TX_CNTL	Transmitter Control Register
$10	LOCKDET1	Lock Detector Configuration Register 1

Note: Reserved and unused locations are not shown in the table.

I/O and Control Registers

The AT86RF401 I/Os and peripherals are placed in the I/O space. The various I/O locations are accessed by the IN and OUT instructions transferring data between the 32 general-purpose working registers and the I/O space. I/O registers within the address range $00–$1F are directly bit-accessible using the SBI and CBI instructions. In these registers, the value of single bits can be checked by using the SBIS and SBIC instructions. Refer to Table 22 on page 45 for more details. The different I/O and peripherals control registers are explained in the following sections.

Transmitter Control Register Descriptions

Lock Detector Configuration Register 1 – LOCKDET1

Bit	7	6	5	4	3	2	1	0
$10	–	–	–	UPOK	ENKO	BOD	CS1	CS0
Read/Write	R/W	R/W	R/W	R/W	R/W	R/W	R/W	R/W
Initial Value	0	0	0	0	0	0	0	0

- **Bits[7:5]**

Reserved.

- **Bit[4]: UPOK**

If set high, this bit resets the unlock counter. The bit is level sensitive, and the unlock counter will not count unless this bit is set to “0”. Leaving this bit high essentially disables the unlock detector.

- **Bit[3]: ENKO (Enable Key on Bit)**

If set to “1”, the rising edge of TXK starts the blackout period, during which any cycle slips are ignored and do not affect the unlock circuit.

- **Bit[2]: BOD (Black Out Disable)**

When set high, cycle slips are counted immediately but only if LOCK is asserted high (TX_CNTL b[2]).

- **Bits[1:0] CS[1:0]: Cycle Slip Counter**

These two bits determine how many cycle slips are allowed before the LOCKDETECT signal is set low. The cycle slips are not counted unless the blackout logic is either disabled or the blackout window has passed.

Table 9. Cycle Slip Counter Definition

CS[1:0]	Functionality
00	1 cycle slip causes unlock condition
01	2 cycle slips cause unlock condition
10	3 cycle slips cause unlock condition
11	4 cycle slips cause unlock condition

Transmit Control Register – TX_CNTL

Bit	7	6	5	4	3	2	1	0
$12	–	–	TXE	TXK	–	LOC	–	–
Read/Write	R/W	R/W	R/W	R/W	R/W	R	R/W	R/W
Initial Value	0	0	0	0	0	0	0	0

- **Bit[7:6]**

Reserved.

- **Bit[5]: TXE, Transmitter Enable**

This bit, when set, turns on the phase locked loop (PLL) RF frequency synthesizer but should not be used to modulate the RF carrier or excessive spurious noise may result.

- **Bit[4]: TXK, Transmitter Key**

This bit, when set, turns on the RF power amplifier. It should be used to modulate the RF carrier manually. This bit should be cleared when the bit timer is configured in transmit mode.

Figure 25. Modulation Control Logic

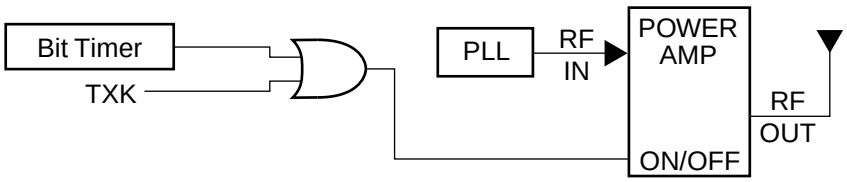

- **Bit[3]**

Reserved.

- **Bit[2]: LOC, PLL Lock**

This bit is set when the frequency synthesizer in the transmitter is locked. Typically, the programmer should test the status of this bit to insure the RF carrier is stable prior to turning on the RF power amplifier.

Power Attenuation Control Register – PWR_ATTEN

Bit	7	6	5	4	3	2	1	0
$14	–	–	PCC2	PCC1	PCC0	PCF2	PCF1	PCF0
Read/Write	R/W	R/W	R/W	R/W	R/W	R/W	R/W	R/W
Initial Value	0	0	0	0	0	0	0	0

This register is used to select the power attenuation level. The total power attenuation is the sum of the coarse attenuation and fine attenuation. As an example, to obtain 15 dB of attenuation, the coarse setting of 12 dB and fine setting of 3 dB would be selected. To obtain 12 dB coarse attenuation, Bits[5:3] would be set to [010]. To obtain 3 dB of fine attentuation would require Bits[2:0] to be set to [011].

Note: Maximum RF output power occurs when Bits[5:0] = [000000].

- **Bits[7:6]**

Reserved

- **Bits[5:3]: PCC, Power Control (coarse)**

Attenuates the output power in 6 dB steps.

Table 10. Coarse Power Control Definition

PCC[5:3]	Output Attenuation
000	0 dB
001	6 dB
010	12 dB
011	18 dB
100	24 dB
101	30 dB
110	Invalid
111	Invalid

- **Bits[2:0]: PCF, Power Control (fine)**

Attenuates the output power in 1 dB steps.

Table 11. Fine Power Control Definition

PCF[2:0]	Output Attenuation
000	0 dB
001	1 dB
010	2 dB
011	3 dB
100	4 dB
101	5 dB
110	Invalid
111	Invalid

VCO Tuning Register 6 – VCOTUNE

Bit	7	6	5	4	3	2	1	0
$16	VCOVDET[1]	VCOVDET[0]	–	VCOTUNE[4]	VCOTUNE[3]	VCOTUNE[2]	VCOTUNE[1]	VCOTUNE[0]
Read/Write	R	R	R/W	R/W	R/W	R/W	R/W	R/W
Initial Value	*	*	0	0	0	0	0	0

Note: * These values are unknown at initial startup.

- **Bits[4:0]: VCO Tuning Capacitor Array**

This device requires the use of an external inductor to tune the VCO. Tolerance of the inductor, coupled with process variation of the device, can lead to variations in the tuning point of the VCO. A switched array of tuning capacitors has been added internally to the device in order to “fine tune” the VCO. This capacitance is switched across pins 3 and 4 (L1 and L2) of the device. The capacitor array is set by VCOTUNE[4:0] and is comprised of the following switched capacitance levels:

Table 12. VCO Tuning Capacitor Definition

VCOTUNE[4:0]	Capacitance (pF)
00000	0
00001	0.03
00010	0.06
00011	0.09
00100	0.12
00101	0.15
00110	0.18
00111	0.21
01000	0.24
01001	0.27
01010	0.30
01011	0.33
01100	0.36
01101	0.39
01110	0.42
01111	0.45
10000	0.48
10001	0.51
10010	0.54
10011	0.57
10100	0.60
10101	0.63
10110	0.66
10111	0.69
11000	0.72
11001	0.75
11010	0.78
11011	0.81
11100	0.84
11101	0.87
11110	0.90
11111	0.93

- **Bits[7:6]: VCO Voltage Detector**

The VCO Voltage Detector circuit monitors the level of the VCO control voltage. This circuit, along with the VCO Switch Caps and the Lock Detect circuit, is intended for use with a software algorithm to tune the VCO such that the VCO control voltage is centered approximately at 1.1V.

The Voltage Detector circuit consists of two comparators with fixed reference voltages of V1 (lower reference voltage) and V2 (upper reference voltage). The VCO Control Voltage is compared to these two reference voltages and generates the state table listed in Table 13. The state of these comparators is output to Bits 7 and 6 (Vcodet[1:0]) of the VCOTUNE register.

Table 13. VCO Window Comparator States

VCOvdet[1:0]	VCO Control Voltage
00	Above lower comparator threshold and below upper comparator threshold. Control Voltage is within the valid window of operation.
01	Below both thresholds. Control Voltage is outside the recommended window of operation.
10	Above both thresholds. Control Voltage is outside the recommended window of operation.
11	Not a valid state.

Lock Detector Configuration Register 2 – LOCKDET2

Bit	7	6	5	4	3	2	1	0
$17	EUD	LAT	ULC[2]	ULC[1]	ULC[0]	LC[2]	LC[1]	LC[0]
Read/Write	R/W	R/W	R/W	R/W	R/W	R/W	R/W	R/W
Initial Value	0	0	0	0	0	0	0	0

- **Bit[7]: EUD**

A “1” enables the unlock detect logic.

- **Bit[6]: LAT (Lock Always True)**

Forces the lockdetect signal to “1” at the output of the lock detect circuitry. This may be useful if the lock detect signal is not going high for some reason, and a power amp interlock has been implemented, and the user wishes to enable the power amp output stage.

- **Bit[5:3]: ULC[2:0]**

The unlock count (ULC) bits count a certain number of reference clocks, after which the unlock detect circuit looks for a number of cycle slips determined by CS[1:0] before making the loc detect signal go low. The ULC bits essentially control the blackout period of the unlock detect circuit. The unlock counter is reset by the KEY signal rising (if ENKO is asserted), or by the LOC rising edge, or by the UPOK signal being set high.

Table 14. PLL Unlock Counter Definition

ULC[2:0]	Number of REF Clocks of Delay
000	8
001	16
010	32
011	64
100	128
101	256
110	512
111	1024

- **Bits[2:0]: LC[2:0]**

The Lock Count (LC) bits control a counter that, after a number of reference clocks, cause lock detect to go high. This counter will reset if a cycle slip or a reset signal occurs (which happens if TXE goes low), if an out-of-lock condition occurs, if the crystal oscillator frequency is too low, or if the VCO feedback frequency is too low.

Table 15. PLL Lock Counter Definition

LC[2:0]	Number of REF Clocks of Delay
000	8
001	16
010	32
011	64
100	128
101	256
110	512
111	1024

EEPROM Control Register Descriptions

Data EEPROM Control Register – DEECR

Bit	7	6	5	4	3	2	1	0
$1C	–	–	–	–	BSY	EEU	EEL	EER
Read/Write	R/W	R/W	R/W	R/W	R	R/W	R/W	R/W
Initial Value 0	0	0	0	0	0	0	0	0

- **Bits[7:4]**

Reserved. These bits should be “0” when written; otherwise, results will be unpredictable.

- **Bit[3]: EEPROM Busy Bit**

Initially set to “0”. This bit will be set high during writes to the EEPROM.

- **Bit[2]: EEPROM Unlock Bit**

Set this bit to “1” before writing the EEPROM. Reset this bit to “0” after the write is complete. This bit should be left in the zero state when the EEPROM is not being used, which will protect the EEPROM data during power transients.

- **Bit[1]: EEPROM Load Bit**

To write the EEPROM, use the following procedure:

Note: Because of noise and power considerations, the EEPROM should not be written while the transmitter is enabled.

1. Set the unlock bit.
2. Write the address of the first byte to the DEEAR.
3. Set the load bit. This locks the page address in the DEEAR. Keep the unlock bit set.
4. Write the desired data to the DEEDR register. This byte is loaded into the EEPROM and will be written when the load bit is later deasserted.
5. If it is desired to write another byte in the same page, write the new address to the DEEAR register, and a new byte to the DEEDR register. Continue until all bytes that are to be written are loaded into the EEPROM. Bytes may only be loaded to an address once. There are eight bytes per page.
6. Deassert the load bit. This starts the write operation. Some time after load is deasserted, the busy bit will go high. Another read or write operation may not be started until the busy bit has returned to “0”. Writes take approximately 4 ms to complete. Again, the unlock bit must still be set when deasserting the load bit.
7. After all writes are complete, write “0” to the unlock bit.

- **Bit[0]: EEPROM Read Bit**

To read the EEPROM use the following procedure:

1. Write the address to the DEEAR.
2. Set the read bit.
3. Read the data register. The read bit will reset itself.
4. If another read needs to be done, repeat steps 1–3 again.

Data EEPROM Data Register – DEEDR

Bit	7	6	5	4	3	2	1	0
$1D	ED7	ED6	ED5	ED4	ED3	ED2	ED1	ED0
Read/Write	R/W	R/W	R/W	R/W	R/W	R/W	R/W	R/W
Initial Value 0	0	0	0	0	0	0	0	0

- **Bits[7:0]**

  This register contains the byte to be written to EEPROM. If a read operation has been done, this register contains that last byte read from the data EEPROM.

Data EEPROM Address Register – DEEAR

Bit	7	6	5	4	3	2	1	0
$1E	–	PA6	PA5	PA4	PA3	BA2	BA1	BA0
Read/Write	R/W	R/W	R/W	R/W	R/W	R/W	R/W	R/W
Initial Value 0	0	0	0	0	0	0	0	0

- **Bit[7]**

  Reserved.

- **Bits[6:3]: Data EEPROM Page Address**

  These bits select the page in the EEPROM that is to be accessed. These bits are write locked and cannot be altered when the load bit is set.

- **Bits[2:0]: Data EEPROM Byte Address**

  These bits select the byte in the page that is to be accessed. During a page write operation, these bits are used in combination with the DEEDR register to write bytes into a page.

Bit Timer Register Descriptions

Bit Timer Count Register – BTCNT

Bit	7	6	5	4	3	2	1	0
$20	C7	C6	C5	C4	C3	C2	C1	C0
Read/Write	R/W	R/W	R/W	R/W	R/W	R/W	R/W	R/W
Initial Value	0	0	0	0	0	0	0	0

- **Bit [7:0]**

Lowest 8 bits of *countval*. When combined with bits [7:6] of the BTCR register, *countval* determines a counter value that sets the width of a mark or a space that is sent to the transmitter. The width of the mark or space is:

$$P_{XX} = P_{AVR} * (countval + 1)$$

where P_{XX} is the period of the mark or space, and P_{AVR} is the period of the AVR clock that is determined by the ACS bits of the AVR configuration register, AVR_CONFIG.

Bit Timer Control Register – BTCR

Bit	7	6	5	4	3	2	1	0
$21	C9	C8	M1	M0	IE	F2	DATA	F0
Read/Write	R/W	R/W	R/W	R/W	R/W	R	R/W	R
Initial Value	0	0	0	0	0	0	0	0

- **Bit[7:6]**

Count_val[9:8]. MSB of BTCNT counter value bits.

- **Bits[5:4]**

Table 16. Bit Timer Mode.

Mode[1:0]	Bit Timer Function
00	Bit Timer Disabled
01	Bit Timer in Generic Timer/Counter Mode
10	Bit Timer in Receive Mode
11	Bit Timer in Transmit Mode

- **Bit[3]: Interrupts Enabled**

If this bit is set, the Flag2 and Flag0 will generate their respective interrupts when they are set. Flag0 interrupt vector is located at 0 x 04. Flag2 interrupt vector is located at 0 x 02. Typically, a JMP instruction resides at these vector locations to pass control to an interrupt handler. For Flag0 only, slightly faster execution can be achieved if the JMP instruction is eliminated, and the interrupt service routine is located beginning at 0 x 04.

- **Bit[2]: Flag2**

In transmit mode, this flag indicates the Transmit Done condition that occurs when the buffer is empty and the counter has counted down to “0”. In receive mode, this flag indicates that an edge has occurred, and the AVR should process the count value in the BTCR and BTCNT registers. This bit is cleared upon read, e.g., IN R16, BTCR.

Table 17. Bit Timer Flag2 Definition

Mode[1:0]	Flag2 Function
00	Disabled
01	Indicates Transmit Done condition; buffer is empty and the counter has expired.
10	An edge has been detected at the IO3 pin.
11	Indicates Transmit Done condition; buffer is empty and the counter has expired.

- **Bit[1]: Data Bit**

In transmit mode, this is a one-bit buffer that the AVR writes data to and the bit timer extracts data from. When the bit timer removes the value from this register, the Flag0 bit is set, and if enabled, an interrupt (INT2) is generated. If the interrupt is used, the ISR should load a new bit into the buffer. If the interrupt is not enabled, then a polling method should be used to detect Flag0 being set. Because of overhead associated with interrupt handling, it may be slightly faster to use polling.

In receive mode, the value in this register indicates whether the edge at the IO3 pin was rising or falling. A “1” indicates a rising edge occurred, and a “0” indicates that a falling edge was detected. The number of AVR clock cycles since the last edge is held in the C[9:0] (*countval*) bits (that is, unless an overflow condition has occurred).

- **Bit[0]: Flag0**

In transmit mode, this flag indicates the buffer is empty and the AVR should load new data into it. In receive mode, this indicates a counter overflow condition has occurred. The AVR should increment its software counter if this condition has occurred. This bit is cleared upon read, e.g., IN R16, BTCR.

Watchdog Timer Control Register – WDTCR

Bit	7	6	5	4	3	2	1	0	
$22	–	–	–	WDTOE	WDE	WDP2	WDP1	WDP0	WDTCR
Read/Write	R	R	R	R/W	R/W	R/W	R/W	R/W	
Initial Value	0	0	0	0	0	0	0	0	

- **Bits[7:5]**

Reserved. These bits will always read as “0”.

- **Bit[4]: WDTOE, Watchdog Turn-off Enable**

This bit must be set (“1”) when the WDE bit is cleared. Otherwise, the watchdog will not be disabled. Once set, hardware will clear this bit to “0” after four clock cycles. Refer to the description of the WDE bit for a watchdog disable procedure.

- **Bit[3]: WDE, Watchdog Enable**

When the WDE is set (“1”), the Watchdog Timer is enabled, and if the WDE is cleared (“0”), the Watchdog Timer function is disabled. WDE can only be cleared if the WDTOE bit is set (“1”). To disable an enabled Watchdog Timer, the following procedure must be followed: In the same operation, write a logical “1” to WDTOE and WDE. A logical “1” must be written to WDE even though it is set to “1” before the disable operation starts. Within the next four clock cycles, write a logical “0” to WDE. This disables the watchdog.

- **Bits[2:0]: WDP2, WDP1, WDP0, Watchdog Timer Prescaler 2, 1 and 0**

The WDP2, WDP1 and WDP0 bits determine the Watchdog Timer prescaling when the Watchdog Timer is enabled. The different prescaling values and their corresponding time-out periods are shown in Table 18.

Table 18. Watchdog Timer Prescale Select

WDP2	WDP1	WDP0	Number of System Clock Cycles
0	0	0	2,048 cycles
0	0	1	4,096 cycles
0	1	0	8,192 cycles
0	1	1	16,384 cycles
1	0	0	32,768 cycles
1	0	1	65,536 cycles
1	1	0	131,072 cycles
1	1	1	262,144 cycles

Note:

$$T_{wdt} = XTALB_{period} \times ACS_{div} \times WDT_{div}$$

Example:

If the crystal period is 50 ns and the system clock divider is set to 32 (Bits[7:5] in the PWR_CTL register are set to 010) and the WDT prescaler is set to 32K, then:

Watchdog Timeout = 50 ns $\times$ 32 $\times$ 32768 = 52 ms

I/O Enable Register – IO_ENAB

Bit	7	6	5	4	3	2	1	0
$30	–	BOHYST	IOE5	IOE4	IOE3	IOE2	IOE1	IOE0
Read/Write	R/W	R/W	R/W	R/W	R/W	R/W	R/W	R/W
Initial Value	0	0	0	0	0	0	0	0

- **Bit[7]**

Reserved.

- **Bit[6]**

If set to “1”, additional hysteresis is added to the battery low and brown-out logic. See BL_CONFIG register description and Table 21 on page 43 for more details.

- **Bits[5:0]**

If set to “1”, the corresponding bit (pin) IO[5:0] is configured as an output. Data may then be written to that output by writing to the IO_DATA register. If set to “0”, the corresponding bit (pin) may be either a button input (refer to the Button Detect Register, $34) used to wake the part up or a normal digital input.

Table 19. I/O Pin Definition

IO_ENAB[n]	IO_DATOUT[n]	IO[n]
0	0	Normal Input
0	1	Button Input
1	0	Output Driven Low
1	1	Output Driven High

I/O Data Out Register – IO_DATOUT

Bit	7	6	5	4	3	2	1	0
$31	–	–	IOO5	IOO4	IOO3	IOO2	IOO1	IOO0
Read/Write	R	R	R/W	R/W	R/W	R/W	R/W	R/W
Initial Value	0	0	0	0	0	0	0	0

- **Bits[7:6]: Reserved**

These bits read “0”.

- **Bits[5.0]**

If enabled in the IO_ENAB register and not in test mode, the data in Bits[5:0] goes to the corresponding general-purpose output IO [5:0].

I/O Data In Register – IO_DATIN

Bit	7	6	5	4	3	2	1	0
$32	–	–	IOI5	IOI4	IOI3	IOI2	IOI1	IOI0
Read/Write	R/W	R/W	R	R	R	R	R	R
Initial Value	0	0						

- **Bits[7:6]: Reserved**

This bit reads “0”.

- **Bits[5:0]**

These bits directly read the data from the I/O pins IO[5:0]. Writes to these bits have no effect.

AVR Configuration Register – AVR_CONFIG

Bit	7	6	5	4	3	2	1	0
$33	–	ACS1	ACS0	TM	BD	BLI	SLEEP	BBM
Read/Write	R/W	R/W	R/W	R/W	R	R	W	R/W
Initial Value	0	0	0	0	0	0	0	0

- **Bits[6:5]: AVR System Clock Select**

These bits select the divide value of the XTALB input that is used to produce the AVR System Clock.

Table 20. AVR Clock Select Definition

ACS[1:0]	AVR System Clock
11	XTALB/16
10	XTALB/32
01	XTALB/64
00	XTALB/128

This clock select value may be programmed on the fly by either the AVR processor in normal operation or by an I/O write SPI command during SPI mode. Note that during SPI mode, the I/O and serial programming logic runs at XTALB/16 frequency.

- **Bit[4]: Test Mode**

When this bit is set to “1”, the part enters test mode. The I/O pins, if enabled, assume the following functionality:

	I/O5	I/O4	I/O3	I/O2	I/O1	I/O0
Normal Mode (RESETB = 1)	txkey (Output)	lockdetect (Output)	txenable (Output)	RFU	RFU	RFU
SPI Mode (RESETB = 0)	txkey (Output)	lockdetect (Output)	txenable (Output)	SPI_CLK	SDO	SDI

Notes: 1. IO_ENAB register is NOT used for SPI pins.
2. In SPI mode, the I/O registers may be directly accessed via the SPI interface. Txkey, lockdetect may be output using this mode.

- **Bit[3]: Battery Dead**

Indicates battery is dead. Only readable by SPI interface.

- **Bit[2]: Battery Low Indicator**

This bit is identical to Bit[7] of Battery Low Configuration Register ($35). When Bit[6] of Battery Low Configuration Register ($35) is set (Battery Low Valid), a set bit in this location indicates that the battery voltage is lower than the voltage level that is determined by Bits[5:0] of Battery Low Configuration Register ($35).

- **Bit [1]: Sleep Bit**

When set, this bit stops the crystal oscillator. This stops the AVR processor with the program counter frozen at the current instruction. Sleep will also stop the Watchdog Timer. The Watchdog Timer is only restarted if the part wakes up. If an I/O pin is configured as a button, a button press will start the oscillator and check the battery level. If the battery level is greater than the Battery Dead level, the AVR system clock is started and normal program execution continues. If the battery level is below the Battery Dead level, the crystal oscillator is turned off, putting the part back to sleep until a button is pressed again (care should be taken not to put the part to sleep unless a button is configured and enabled).

- **Bit[0]: Button Boot Mode (BBM)**

If the BBM bit is set and the part is brought out of sleep mode by a button input activation, the part will enter the button reset state. In this state, the part will reboot and begin

code execution at the reset location. This bit is reset at POR and when exiting the button reset state. All other registers remain unchanged.

Button Detect Register – B_DET

Bit	7	6	5	4	3	2	1	0
$34	–	–	BD5	BD4	BD3	BD2	BD1	BD0
Read/Write	R	R	R/W	R/W	R/W	R/W	R/W	R/W
Initial Value	0	0	0	0	0	0	0	0

- **Bits[7:6]**

Reserved. These bits read “0”.

- **Bits[5:0]**

When an I/O pin is configured as a button using the IO_ENAB and IO_DATOUT registers and a logic low is detected on that pin, the button detect logic is activated. If the part is in sleep mode, the part responds as described in the AVR Configuration Register description. If a good battery is present, the appropriate bit is set in this register. A bit in this register is cleared by writing a “0” to it.

Battery Low Configuration Register – BL_CONFIG

Bit	7	6	5	4	3	2	1	0
$35	BL	BLV	BL5	BL4	BL3	BL2	BL1	BL0
Read/Write	R	R	R/W	R/W	R/W	R/W	R/W	R/W
Initial Value	0	0	0	0	0	0	0	0

- **Bit[7]: Battery Low**

When Bit[6] in this register is set (Battery Low Valid), the BL (Battery Low) bit indicates that the battery voltage is lower than the voltage level that is determined by Bit[5:0] of this register. It is important that the programmer also check Bit[6] (Battery Low Valid) to be certain that this condition is valid.

- **Bit[6]: Battery Low Valid**

When the Battery Low Configuration Register is written, this bit is set to “0”. When the battery voltage has been sampled and compared to the voltage determined by the BLx bits, this bit is set to “1” indicating that the data in Bit[7] (Battery Low) is valid. This can take up to 3100 XTAL cycles to complete.

Note: The programmer should ensure that this bit is cleared prior to making a determination of the Battery Low status. This can be done by reloading Bit[5] or directly clearing Bit[6]. Generally, the programmer loads Bit[5], loops until Bit[6] is set, and then checks Bit[3] to determine the status of the battery.

- **Bit[5:0]: Battery Low Detection Level**

This value is sent to the battery monitor. The threshold is calculated using the formulas shown in Table 21 on page 43.

Note: This threshold can be set below the brown-out voltage level.

Table 21. Low Battery Detection Threshold Formulas (V_{REF} is approximately 0.7 volts)

V_{DD} Falling	V_{DD} Rising	
	BOHYST = 1 (large hysteresis)	**BOHYST = 0 (small hysteresis)**
$VDD = \frac{3.887 \times V_{REF}}{1 + \left[\frac{0.887}{63} \times \text{BL[5:0]}\right]}$	$VDD = \frac{4.05 \times V_{REF}}{1 + \left[\frac{0.887}{63} \times \text{BL[5:0]}\right]}$	$VDD = \frac{4.22 \times V_{REF}}{1 + \left[\frac{0.887}{63} \times \text{BL[5:0]}\right]}$
$\text{BL[5:0]} = 71 \times \left[3.887 \times \left[\frac{V_{REF}}{V_{DD}}\right] - 1\right]$	$\text{BL[5:0]} = 71 \times \left[4.05 \times \left[\frac{V_{REF}}{V_{DD}}\right] - 1\right]$	$\text{BL[5:0]} = 71 \times \left[4.22 \times \left[\frac{V_{REF}}{V_{DD}}\right] - 1\right]$

The Stack Pointer – SP

The Stack Pointer is implemented as two 8-bit registers in the I/O space locations $3E ($5E) and $3D ($5D). **Caution:** As the data memory has 224 locations, only 8 bits are used and the SPH register must be programmed to 0 x 00.

Bit	15	14	13	12	11	10	9	8	
$3E	–	–	–	–	–	SP10	SP9	SP8	SPH
$3D	SP7	SP6	SP5	SP4	SP3	SP2	SP1	SP0	SPL
	7	6	5	4	3	2	1	0	
Read/Write	R	R	R	R	R	R/W	R/W	R/W	
	R/W	R/W	R/W	R/W	R/W	R/W	R/W	R/W	
Initial Value	0	0	0	0	0	0	0	0	
	0	0	0	0	0	0	0	0	

The Stack Pointer points to the data SRAM stack area where the Subroutine and Interrupt Stacks are located. This stack space in the data SRAM must be defined by the program before any subroutine calls are executed or interrupts are enabled. The Stack Pointer must be set to point above $60. The Stack Pointer is decremented by one when data is pushed onto the stack with the PUSH instruction, and it is decremented by two when the return address is pushed onto the stack with subroutine call and interrupt. The Stack Pointer is incremented by one when data is popped from the stack with the POP instruction, and it is incremented by two when data is popped from the stack with Return from Subroutine (RET) or Return from Interrupt (RETI).

The Status Register – SREG

The AVR status register – SREG – at I/O space location $3F is defined as:

Bit	7	6	5	4	3	2	1	0
$3F	I	T	H	S	V	N	Z	C
Read/Write	R/W	R/W	R/W	R/W	R/W	R/W	R/W	R/W
Initial Value	0	0	0	0	0	0	0	0

- **Bit[7] – I: Global Interrupt Enable**

The global interrupt enable bit must be set (“1”) for the interrupts to be enabled. The individual interrupt enable control is then performed in the interrupt mask registers (GIMSK/TIMSK). If the global interrupt enable register is cleared (“0”), none of the interrupts are enabled, independent of the GIMSK/TIMSK values. The I-bit is cleared by hardware after an interrupt has occurred and is set by the RETI instruction to enable subsequent interrupts.

- **Bit[6] – T: Bit Copy Storage**

The bit copy instructions BLD (Bit LoaD) and BST (Bit STore) use the T-bit as source and destination for the operated bit. A bit from a register in the register file can be copied into T by the BST instruction, and a bit in T can be copied into a bit in a register in the register file by the BLD instruction.

- **Bit[5] – H: Half Carry Flag**

The half carry flag H indicates a half carry in some arithmetic operations. See Figure 10 on page 21 for detailed information.

- **Bit[4] – S: Sign Bit, S = N⊕V**

The S-bit is always an exclusive or between the negative flag N and the two's complement overflow flag V. See Table 22 for detailed information.

- **Bit[3] – V: Two's Complement Overflow Flag**

The two's complement overflow flag V supports two's complement arithmetics. See Table 22 below for detailed information.

- **Bit[2] – N: Negative Flag**

The negative flag N indicates a negative result after the different arithmetic and logic operations. See Table 22 below for detailed information.

- **Bit[1] – Z: Zero Flag**

The zero flag Z indicates a zero result after the different arithmetic and logic operations. See Table 22 below for detailed information.

- **Bit[0] – C: Carry Flag**

The carry flag C indicates a carry in an arithmetic or logic operation. See Table 22 for detailed information.

Table 22. Instruction Set

Mnemonics	Operands	Description	Operation	Flags	#Clocks
Arithmetic and Logic Instructions					
ADD	Rd, Rr	Add Two Registers	Rd ← Rd + Rr	Z,C,N,V,H	
ADC	Rd, Rr	Add with Carry Two Registers	Rd ← Rd + Rr + C	Z,C,N,V,H	1
ADIW	Rdl,K	Add Immediate to Word	Rdh:Rdl ← Rdh:Rdl + K	Z,C,N,V,S	1
SUB	Rd, Rr	Subtract Two Registers	Rd ← Rd - Rr	Z,C,N,V,H	2
SUBI	Rd, K	Subtract Constant from Register	Rd ← Rd - K	Z,C,N,V,H	1
SBC	Rd, Rr	Subtract with Carry Two Registers	Rd ← Rd - Rr - C	Z,C,N,V,H	1
SBCI	Rd, K	Subtract with Carry Constant from Register	Rd ← Rd - K - C	Z,C,N,V,H	1
SBIW	Rdl,K	Subtract Immediate from Word	Rdh:Rdl ← Rdh:Rdl - K	Z,C,N,V,S	1
AND	Rd, Rr	Logical AND Registers	Rd ← Rd • Rr	Z,N,V	2
ANDI	Rd, K	Logical AND Register and Constant	Rd ← Rd • K	Z,N,V	1
OR	Rd, Rr	Logical OR Registers	Rd ← Rd v Rr	Z,N,V	1
ORI	Rd, K	Logical OR Register and Constant	Rd ← Rd v K	Z,N,V	1
EOR	Rd, Rr	Exclusive OR Registers	Rd ← Rd ⊕ Rr	Z,N,V	1
COM	Rd	One's Complement	Rd ← $FF – Rd	Z,C,N,V	1
NEG	Rd	Two's Complement	Rd ← $00 – Rd	Z,C,N,V,H	1
SBR	Rd,K	Set Bit(s) in Register	Rd ← Rd v K	Z,N,V	1
CBR	Rd,K	Clear Bit(s) in Register	Rd ← Rd • ($FF - K)	Z,N,V	1
INC	Rd	Increment	Rd ← Rd + 1	Z,N,V	1
DEC	Rd	Decrement	Rd ← Rd – 1	Z,N,V	1
TST	Rd	Test for Zero or Minus	Rd ← Rd • Rd	Z,N,V	1

Table 22. Instruction Set (Continued)

Mnemonics	Operands	Description	Operation	Flags	#Clocks
CLR	Rd	Clear Register	Rd ← Rd ⊕ Rd	Z,N,V	1
SER	Rd	Set Register	Rd ← $FF	None	1
Branch Instructions					
RJMP	k	Relative Jump	PC ← PC + k + 1	None	1
IJMP		Indirect Jump to (Z)	PC ← Z	None	2
JMP	k	Direct Jump	PC ← k	None	2
RCALL	k	Relative Subroutine Call	PC ← PC + k + 1	None	3
ICALL		Indirect Call to (Z)	PC ← Z	None	3
CALL	k	Direct Subroutine Call	PC ← k	None	3
RET		Subroutine Return	PC ← STACK	None	4
RETI		Interrupt Return	PC ← STACK	I	4
CPSE	Rd,Rr	Compare, Skip if Equal	if (Rd = Rr) PC ← PC + 2 or 3	None	1/2/3
CP	Rd,Rr	Compare	Rd – Rr	Z, N,V,C,H	1
CPC	Rd,Rr	Compare with Carry	Rd – Rr – C	Z, N,V,C,H	1
CPI	Rd,K	Compare Register with Immediate	Rd – K	Z, N,V,C,H	1
SBRC	Rr, b	Skip if Bit in Register Cleared	If (Rr(b)=0) PC ← PC + 2 or 3	None	1/2/3
SBRS	Rr, b	Skip if Bit in Register Set	If (Rr(b)=1) PC ← PC + 2 or 3	None	1/2/3
SBIC	P, b	Skip if Bit in I/O Register Cleared	If (P(b)=0) PC ← PC + 2 or 3	None	1/2/3
SBIS	P, b	Skip if Bit in I/O Register Set	If (P(b)=1) PC ← PC + 2 or 3	None	1/2/3
BRBS	s, k	Branch if Status Flag Set	If (SREG(s) = 1) then PC ← PC + k + 1	None	1/2
BRBC	s, k	Branch if Status Flag Cleared	If (SREG(s) = 0) then PC ← PC + k + 1	None	1/2
BREQ	k	Branch if Equal	If (Z = 1) then PC ← PC + k + 1	None	1/2
BRNE	k	Branch if Not Equal	If (Z = 0) then PC ← PC + k + 1	None	1/2
BRCS	k	Branch if Carry Set	If (C = 1) then PC ← PC + k + 1	None	1/2
BRCC	k	Branch if Carry Cleared	If (C = 0) then PC ← PC + k + 1	None	1/2
BRSH	k	Branch if Same or Higher	If (C = 0) then PC ← PC + k + 1	None	1/2
BRLO	k	Branch if Lower	If (C = 1) then PC ← PC + k + 1	None	1/2
BRMI	k	Branch if Minus	If (N = 1) then PC ← PC + k + 1	None	1/2
BRPL	k	Branch if Plus	If (N = 0) then PC ← PC + k + 1	None	1/2
BRGE	k	Branch if Greater or Equal, Signed	If (N ⊕ V= 0) then PC ← PC + k + 1	None	1/2
BRLT	k	Branch if Less Than Zero, Signed	If (N ⊕ V= 1) then PC ← PC + k + 1	None	1/2
BRHS	k	Branch if Half Carry Flag Set	If (H = 1) then PC ← PC + k + 1	None	1/2
BRHC	k	Branch if Half Carry Flag Cleared	If (H = 0) then PC ← PC + k + 1	None	1/2
BRTS	k	Branch if T Flag Set	If (T = 1) then PC ← PC + k + 1	None	1/2
BRTC	k	Branch if T Flag Cleared	If (T = 0) then PC ← PC + k + 1	None	1/2
BRVS	k	Branch if Overflow Flag Set	If (V = 1) then PC ← PC + k + 1	None	1/2

Table 22. Instruction Set (Continued)

Mnemonics	Operands	Description	Operation	Flags	#Clocks
BRVC	k	Branch if Overflow Flag Cleared	If (V = 0) then PC ← PC + k + 1	None	1/2
BRIE	k	Branch if Interrupt Enabled	If (I = 1) then PC ← PC + k + 1	None	1/2
BRID	k	Branch if Interrupt Disabled	If (I = 0) then PC ← PC + k + 1	None	1/2
Data Transfer Instructions					
MOV	Rd, Rr	Move Between Registers	Rd ← Rr	None	1
MOVW	Rd, Rr	Copy Register Word	Rd+1:Rd ← Rr + 1:Rr		None
LDI	Rd, K	Load Immediate	Rd ← K	None	1
LD	Rd, X	Load Indirect	Rd ← (X)	None	2
LD	Rd, X+	Load Indirect and Post-Inc.	Rd ← (X), X ← X + 1	None	2
LD	Rd, –X	Load Indirect and Pre-Dec.	X ← X – 1, Rd ← (X)	None	2
LD	Rd, Y	Load Indirect	Rd ← (Y)	None	2
LD	Rd, Y+	Load Indirect and Post-Inc.	Rd ← (Y), Y ← Y + 1	None	2
LD	Rd, –Y	Load Indirect and Pre-Dec.	Y ← Y – 1, Rd ← (Y)	None	2
LDD	Rd,Y+q	Load Indirect with Displacement	Rd ← (Y + q)	None	2
LD	Rd, Z	Load Indirect	Rd ← (Z)	None	2
LD	Rd, Z+	Load Indirect and Post-Inc.	Rd ← (Z), Z ← Z + 1	None	2
LD	Rd, –Z	Load Indirect and Pre-Dec.	Z ← Z – 1, Rd ← (Z)	None	2
LDD	Rd, Z+q	Load Indirect with Displacement	Rd ← (Z + q)	None	2
LDS	Rd, k	Load Direct from SRAM	Rd ← (k)	None	2
ST	X, Rr	Store Indirect	(X) ← Rr	None	2
ST	X+, Rr	Store Indirect and Post-Inc.	(X) ← Rr, X ← X + 1	None	2
ST	– X, Rr	Store Indirect and Pre-Dec.	X ← X – 1, (X) ← Rr	None	2
ST	Y, Rr	Store Indirect	(Y) ← Rr	None	2
ST	Y+, Rr	Store Indirect and Post-Inc.	(Y) ← Rr, Y ← Y + 1	None	2
ST	–Y, Rr	Store Indirect and Pre-Dec.	Y ← Y – 1, (Y) ← Rr	None	2
STD	Y+q,Rr	Store Indirect with Displacement	(Y + q) ← Rr	None	2
ST	Z, Rr	Store Indirect	(Z) ← Rr	None	2
ST	Z+, Rr	Store Indirect and Post-Inc.	(Z) ← Rr, Z ← Z + 1	None	2
ST	–Z, Rr	Store Indirect and Pre-Dec.	Z ← Z – 1, (Z) ← Rr	None	2
STD	Z+q,Rr	Store Indirect with Displacement	(Z + q) ← Rr	None	2
STS	k, Rr	Store Direct to SRAM	(k) ← Rr	None	2
LPM		Load Program Memory	R0 ← (Z)	None	3
LPM	Rd, Z	Load Program Memory	Rd ← (Z)	None	3
LPM	Rd, Z+	Load Program Memory and Post-Inc.	Rd ← (Z), Z ← Z+1	None	3
IN	Rd, P	In Port	Rd ← P	None	1

Table 22. Instruction Set (Continued)

Mnemonics	Operands	Description	Operation	Flags	#Clocks
OUT	P, Rr	Out Port	P ← Rr	None	1
PUSH	Rr	Push Register on Stack	STACK ← Rr	None	2
POP	Rd	Pop Register from Stack	Rd ← STACK	None	2
Bit and Bit-test Instructions					
SBI	P, b	Set Bit in I/O Register	I/O(P,b) ← 1	None	2
CBI	P, b	Clear Bit in I/O Register	I/O(P,b) ← 0	None	2
LSL	Rd	Logical Shift Left	Rd(n+1) ← Rd(n), Rd(0) ← 0	Z,C,N,V	1
LSR	Rd	Logical Shift Right	Rd(n) ← Rd(n+1), Rd(7) ← 0	Z,C,N,V	1
ROL	Rd	Rotate Left Through Carry	Rd(0) ← C, Rd(n+1) ← Rd(n), C ← Rd(7)	Z,C,N,V	1
ROR	Rd	Rotate Right Through Carry	Rd(7) ← C, Rd(n) ← Rd(n+1), C ← Rd(0)	Z,C,N,V	1
ASR	Rd	Arithmetic Shift Right	Rd(n) ← Rd(n+1), n = 0...6	Z,C,N,V	1
SWAP	Rd	Swap Nibbles	Rd(3...0) ← Rd(7...4), Rd(7...4) ← Rd(3...0)	None	1
BSET	s	Flag Set	SREG(s) ← 1	SREG(s)	1
BCLR	s	Flag Clear	SREG(s) ← 0	SREG(s)	1
BST	Rr, b	Bit Store from Register to T	T ← Rr(b)	T	1
BLD	Rd, b	Bit Load from T to Register	Rd(b) ← T	None	1
SEC		Set Carry	C ← 1	C	1
CLC		Clear Carry	C ← 0	C	1
SEN		Set Negative Flag	N ← 1	N	1
CLN		Clear Negative Flag	N ← 0	N	1
SEZ		Set Zero Flag	Z ← 1	Z	1
CLZ		Clear Zero Flag	Z ← 0	Z	1
SEI		Global Interrupt Enable	I ← 1	I	1
CLI		Global Interrupt Disable	I ← 0	I	1
SES		Set Signed Test Flag	S ← 1	S	1
CLS		Clear Signed Test Flag	S ← 0	S	1
SEV		Set Two's Complement Overflow	V ← 1	V	1
CLV		Clear Two's Complement Overflow	V ← 0	V	1
SET		Set T in SREG	T ← 1	T	1
CLT		Clear T in SREG	T ← 0	T	1
SEH		Set Half Carry Flag in SREG	H ← 1	H	1
CLH		Clear Half Carry Flag in SREG	H ← 0	H	1
NOP		No Operation		None	1
SLEEP		Sleep	Not Implemented	None	3
WDR		Watchdog Reset	(See specific description for WDR/timer)	None	1

Ordering Information

RF Output	Ordering Code	Package	Application	Temperature Operating Range
315 MHz	AT86RF401U	20T	North American	–40°C to 85°C
434 MHz	AT86RF401E	20T	European	–40°C to 85°C
264 to 456 MHz	AT86RF401X	20T	All Applications	–40°C to 85°C

Package Drawing

All devices are packaged on tape in reel; standard reel quantity is 2,500 pieces.

20A2 – TSSO

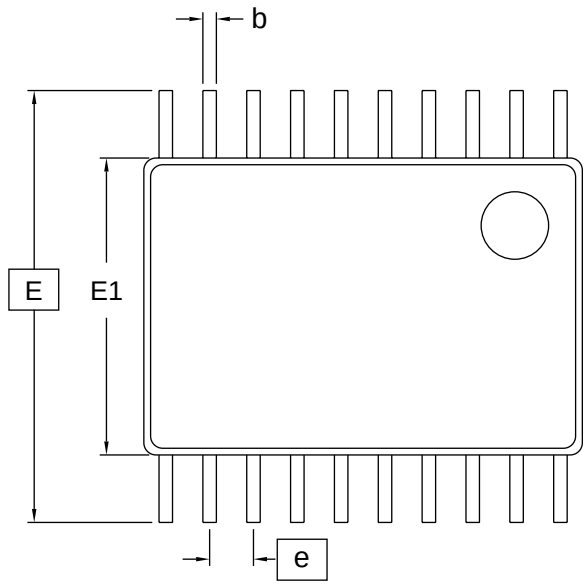

Top View

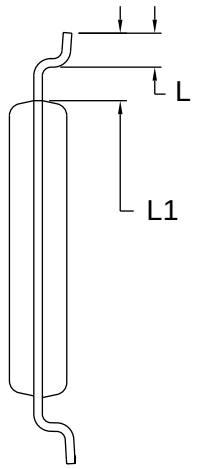

End View

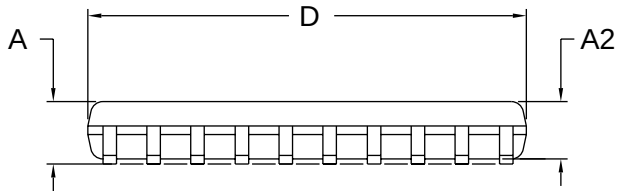

Side View

COMMON DIMENSIONS
(Unit of Measure = mm)

SYMBOL	MIN	NOM	MAX	NOTE
D	6.40	6.50	6.60	2, 5
E	6.40 BSC			
E1	4.30	4.40	4.50	3, 5
A	–	–	1.20	
A2	0.80	1.00	1.05	
b	0.19	–	0.30	4
e	0.65 BSC			
L	0.45	0.60	0.75	
L1	1.00 REF			

Notes:
1. This drawing is for general information only. Please refer to JEDEC Drawing MO-153, Variation AC, for additional information.
2. Dimension D does not include mold Flash, protrusions or gate burrs. Mold Flash, protrusions and gate burrs shall not exceed 0.15 mm (0.006 in) per side.
3. Dimension E1 does not include inter-lead Flash or protrusions. Inter-lead Flash and protrusions shall not exceed 0.25 mm (0.010 in) per side.
4. Dimension b does not include Dambar protrusion. Allowable Dambar protrusion shall be 0.08 mm total in excess of the b dimension at maximum material condition. Dambar cannot be located on the lower radius of the foot. Minimum space between protrusion and adjacent lead is 0.07 mm.
5. Dimension D and E1 to be determined at Datum Plane H.

6/3/02

2325 Orchard Parkway San Jose, CA 95131	**TITLE** **20A2**, 20-lead (4.4 x 6.5 mm Body), 0.65 pitch, Thin Shrink Small Outline Package (TSSOP)	**DRAWING NO.** 20A2	**REV.** C

Data Sheet Change Log

Please note that the page numbers referenced below apply to this document.

Changes from Rev. 1424E-RKE-03/03 to Rev. 1424F-RKE-9/03

- Updated text in *Low Battery Detection* section on page 10.
- Table 3, in *Low Battery Detection* section on page 10 was moved to Battery Low Configuration Register section and became Table 21 (page 43).
- Updated text in *Battery Low Configuration Register* section (page 42).
- Renumbered tables as required to maintain proper sequence.
- Added *Data Sheet Change Log* section (page 51).
- Replaced “Power Control Register” with “AVR Configuration Register” in *Button Detect Register* section (page 42).
- Removed references to CFIL in Figures 1, 2, and 3 and Table 2.
- Changed description of Bit[2] (LOC) in *Transmit Control Register* section (page 30) from R/W to R and included additional descriptive text for Bit[5], Bit[4], and Bit[2].
- Added “Read Signature Byte” command to Serial Programming Instruction Set shown in Table 7 on page 15 and added *Signature Bytes* section on page 14.
- Added note regarding maximum output power in *Power Attenuation Control Register* description section (page 30).
- Added text to “Button Reset” paragraph in the *Reset Sources* section (page 12).
- Added text to *Bit Timer* section (page 11).
- Added text to *Bit Timer Control Register* section (page 37).

Atmel Corporation

2325 Orchard Parkway
San Jose, CA 95131, USA
Tel: 1(408) 441-0311
Fax: 1(408) 487-2600

Regional Headquarters

Europe
Atmel Sarl
Route des Arsenaux 41
Case Postale 80
CH-1705 Fribourg
Switzerland
Tel: (41) 26-426-5555
Fax: (41) 26-426-5500

Asia
Room 1219
Chinachem Golden Plaza
77 Mody Road Tsimshatsui
East Kowloon
Hong Kong
Tel: (852) 2721-9778
Fax: (852) 2722-1369

Japan
9F, Tonetsu Shinkawa Bldg.
1-24-8 Shinkawa
Chuo-ku, Tokyo 104-0033
Japan
Tel: (81) 3-3523-3551
Fax: (81) 3-3523-7581

Atmel Operations

Memory
2325 Orchard Parkway
San Jose, CA 95131, USA
Tel: 1(408) 441-0311
Fax: 1(408) 436-4314

Microcontrollers
2325 Orchard Parkway
San Jose, CA 95131, USA
Tel: 1(408) 441-0311
Fax: 1(408) 436-4314

La Chantrerie
BP 70602
44306 Nantes Cedex 3, France
Tel: (33) 2-40-18-18-18
Fax: (33) 2-40-18-19-60

ASIC/ASSP/Smart Cards
Zone Industrielle
13106 Rousset Cedex, France
Tel: (33) 4-42-53-60-00
Fax: (33) 4-42-53-60-01

1150 East Cheyenne Mtn. Blvd.
Colorado Springs, CO 80906, USA
Tel: 1(719) 576-3300
Fax: 1(719) 540-1759

Scottish Enterprise Technology Park
Maxwell Building
East Kilbride G75 0QR, Scotland
Tel: (44) 1355-803-000
Fax: (44) 1355-242-743

RF/Automotive
Theresienstrasse 2
Postfach 3535
74025 Heilbronn, Germany
Tel: (49) 71-31-67-0
Fax: (49) 71-31-67-2340

1150 East Cheyenne Mtn. Blvd.
Colorado Springs, CO 80906, USA
Tel: 1(719) 576-3300
Fax: 1(719) 540-1759

Biometrics/Imaging/Hi-Rel MPU/ High Speed Converters/RF Datacom
Avenue de Rochepleine
BP 123
38521 Saint-Egreve Cedex, France
Tel: (33) 4-76-58-30-00
Fax: (33) 4-76-58-34-80

Literature Requests
www.atmel.com/literature

Disclaimer: Atmel Corporation makes no warranty for the use of its products, other than those expressly contained in the Company's standard warranty which is detailed in Atmel's Terms and Conditions located on the Company's web site. The Company assumes no responsibility for any errors which may appear in this document, reserves the right to change devices or specifications detailed herein at any time without notice, and does not make any commitment to update the information contained herein. No licenses to patents or other intellectual property of Atmel are granted by the Company in connection with the sale of Atmel products, expressly or by implication. Atmel's products are not authorized for use as critical components in life support devices or systems.

© Atmel Corporation 2003. **All rights reserved.** Atmel® and combinations thereof are the registered trademarks of Atmel Corporation or its subsidiaries. Other terms and product names may be the trademarks of others.

Printed on recycled paper.

1424F–RKE–12/03